

AP Series Recessed Ceiling Pockets - 4, 5, 6, 7”

ASSEMBLY & INSTALLATION GUIDE

CONTENTS

SECTION A | OVERVIEW 3

POCKET SCHEMATICS 3

SECTION B | SPECIFICATIONS 5

ARCHITECTURAL VIEWS 5

MAXIMUM ROLL DIAMETERS 6

ROLLEASE ACMEDA BRACKET HARDWARE 7

SECTION C | ASSEMBLY & INSTALLATION 10

POCKET INSTALLATION BEST PRACTICES 10

FIELD ALTERATIONS 11

SECTION D | SUPPORT 12

DISCLAIMER

INTRODUCTION

This Product Specifications manual for the AP Series of Recessed Ceiling Pockets product line has been produced by Rollease Acmeda to supply the necessary information for the safe and correct installation of our commercial pockets.

DISCLAIMER

Rollease Acmeda has used reasonable care in preparing the information included in this document, but makes no representations or warranties as to the completeness or accuracy of the information. Information is supplied upon the condition that the persons receiving the information will make their own determination as to its suitability for their purposes prior to use. Rollease Acmeda assumes no liability whatsoever for any damages incurred by you resulting from errors in or omissions from the information included herein. Rollease Acmeda reserves the right to make changes without further notice to any products to improve reliability, function or design.

COPYRIGHT

COPYRIGHT © ROLLEASE ACMEDA

All rights are reserved. No part of this document may be reproduced or utilised in any means, by any means, electronic or mechanical including photocopying, recordings, or by any information storage or retrieval system, without the express permission from Rollease Acmeda.

ROLLEASE ACMEDA

POCKET SCHEMATICS

AP-44 | 4" POCKET, END PLATE, & CLOSURE

anodised 020 | pure white 069

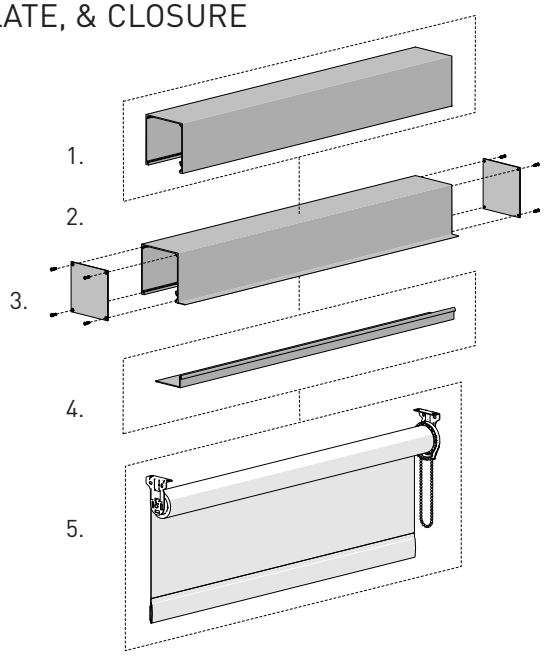

SYSTEM INDEX:

1. 4" x 4" Shade Pocket with no lip
2. 4" x 4" Shade Pocket with tile lip
3. 4" x 4" Pocket Endplate
4. Bottom Closure
5. Roller Shade System

AP-55 | 5" POCKET, END

anodised 020 | pure white 069

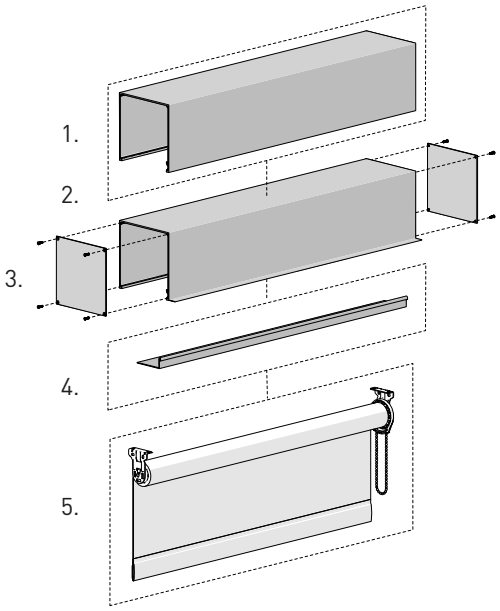

SYSTEM INDEX:

1. 5" x 5" Shade Pocket with no lip
2. 5" x 5" Shade Pocket with tile lip
3. 5" x 5" Pocket Endplate
4. Bottom Closure
5. Roller Shade System

©Copyright All Rights Reserved Rollease Acmeda

AP-66 | 6" POCKET, END

pure white
069

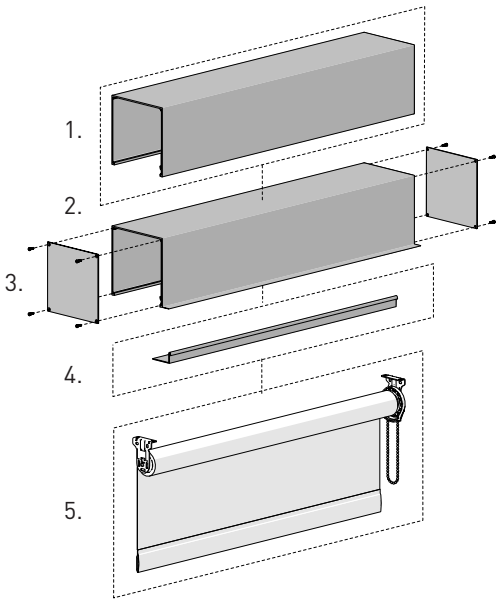

SYSTEM INDEX:

1. 6" x 6" Shade Pocket with no lip
2. 6" x 6" Shade Pocket with tile lip
3. 6" x 6" Pocket Endplate
4. Bottom Closure
5. Roller Shade System

AP-79 | 7" X 9" POCKET

pure white
069
(Interior Only)

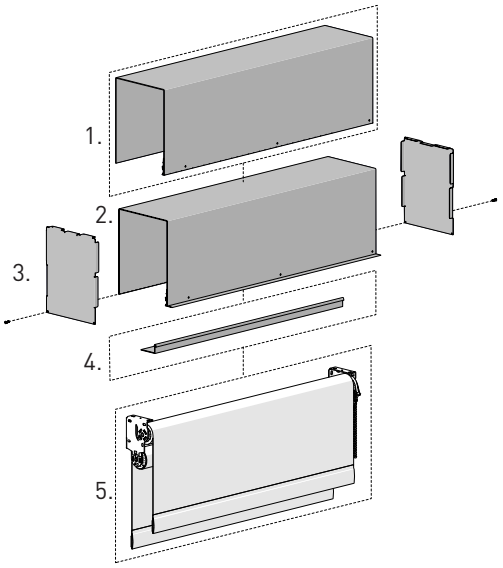

SYSTEM INDEX:

1. 7" x 9" Shade Pocket with no lip
2. 7" x 9" Shade Pocket with tile lip
3. 7" x 9" Pocket Endplate
4. Bottom Closure (optional)
5. Dual Roller Shade System

©Copyright All Rights Reserved Rollease Acmeda

ROLLEASE ACMEDA COMPATIBLE CONTROLS



MOTOR



CHAIN



SPRING

BOTTOM CLOSURE

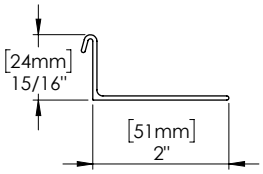

RCCP-8006-075305
(2" Return)

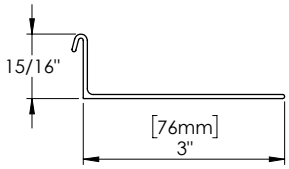

RCCP-8003-075305
(3" return)

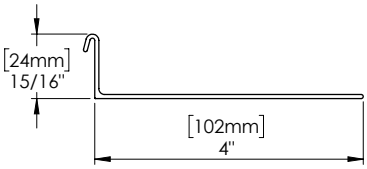

RCCP-8004-075305
(4" return)

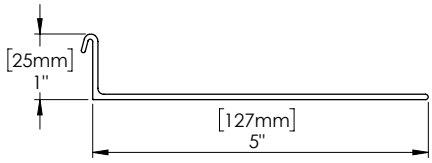

RCCP-8005-075305
(5" return)

©Copyright All Rights Reserved Rollease Acmeda

ARCHITECTURAL VIEWS

AP-44 | 4" X 4" POCKET

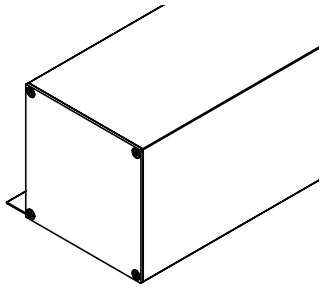

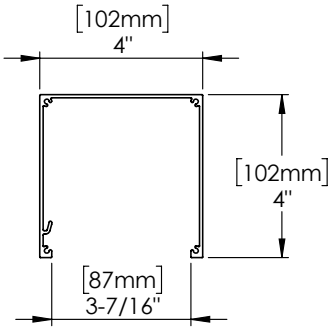

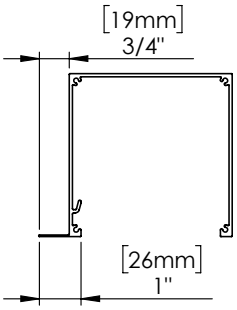

AP-55 | 5" X 5" POCKET

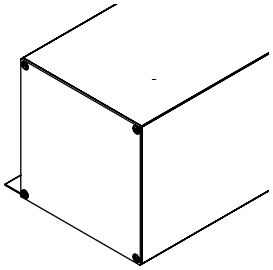

END PLATE AVAILABLE

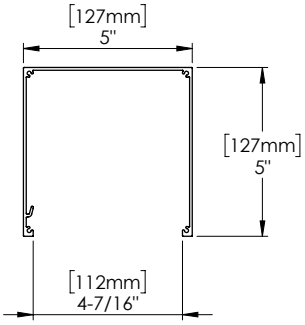

NO LIP

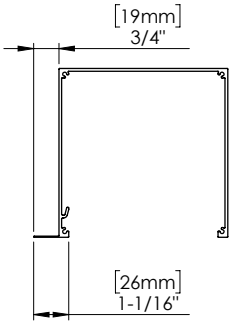

LIP

©Copyright All Rights Reserved Rollease Acmeda

AP-66 | 6" X 6" POCKET

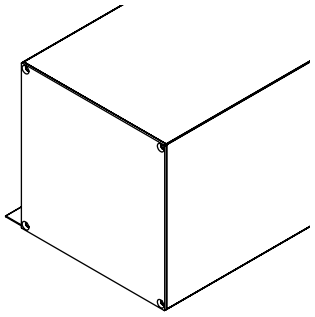

END PLATE AVAILABLE

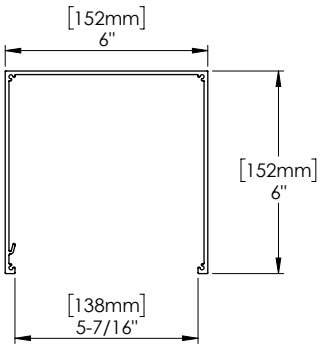

NO LIP

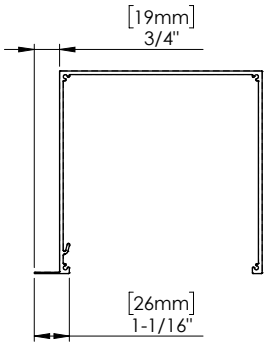

LIP

AP-79 | 7" X 9" POCKET

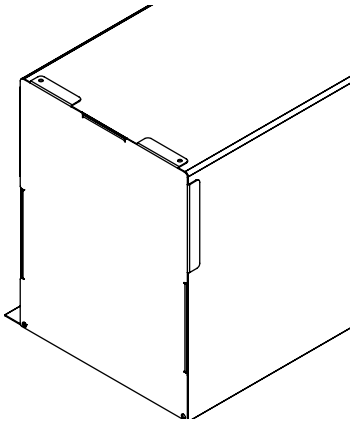

END PLATE AVAILABLE

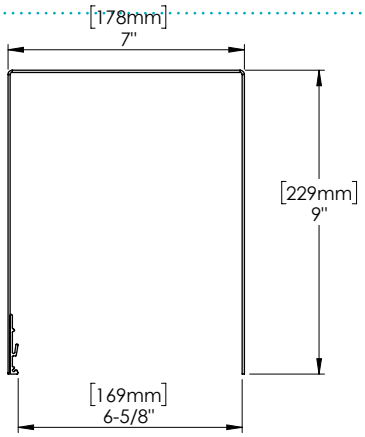

NO LIP

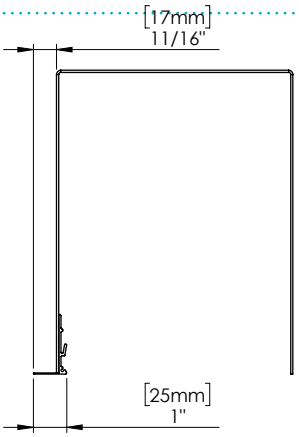

LIP

MAXIMUM ROLL DIAMETERS

All maximum roll dimensions are based on pocket size without using bottom closure.

AP-44 | 4" X 4" POCKET

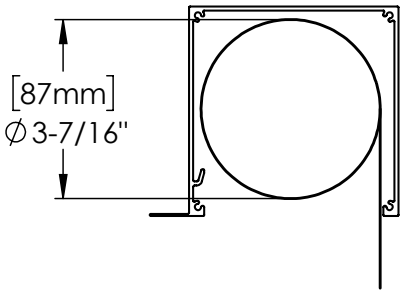

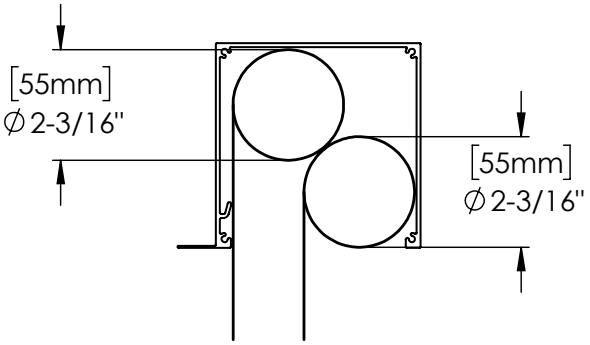

©Copyright All Rights Reserved Rollease Acmeda

AP-55 | 5" X 5" POCKET

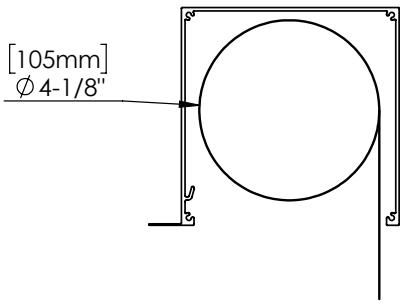

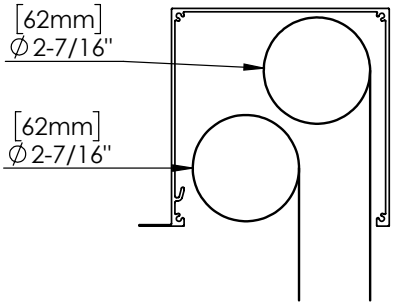

AP-66 | 6"X 6" POCKET

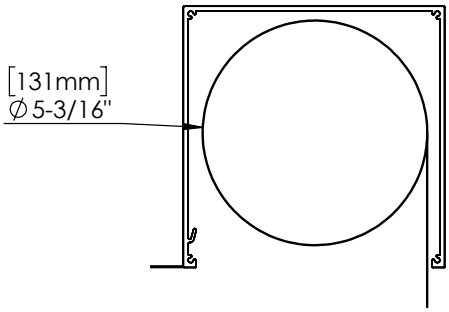

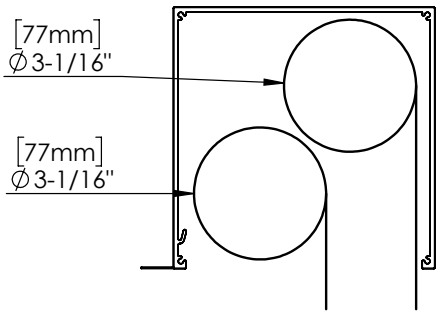

AP-79 | 7" X 9" POCKET

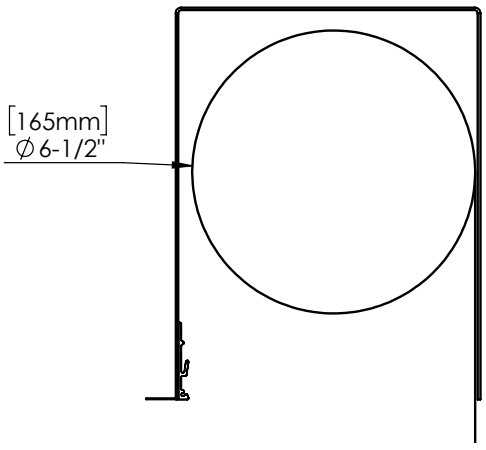

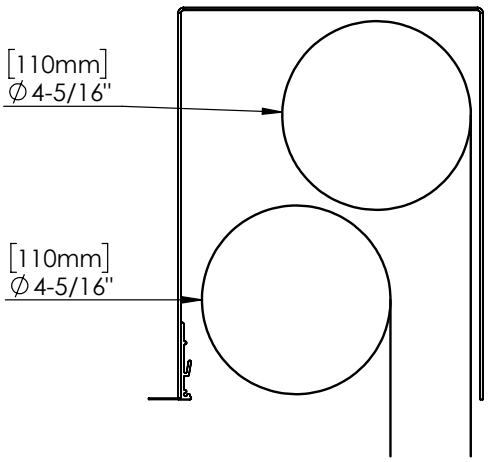

©Copyright All Rights Reserved Rollease Acmeda

ROLLEASE ACMEDA

ROLLEASE ACMEDA BRACKET HARDWARE

PRODUCT LINE	PART NUMBER	DESCRIPTION	MAX ROLL
Skyline	SLB660xx	1-1/2"	3" [76mm]
	SLB680Rxx	Ribbed 2"	4" [102mm]
	SLB690R	Ribbed 2-7/8"	5-1/2" [140mm]
	SLNB650xx	Narrow 1-1/4"	2-1/4" [57mm]
	SLNB660xx	Narrow 1-1/2"	3" [76mm]
	SLNB680xx	Narrow 2"	4" [102mm]
	SLNB690	Narrow 2-7/8"	5-1/2" [140mm]
	SL01-0306-xxx040	LX Skyline 40mm	3" [76mm]
	RB18-1001-xxx000	Double Vertical Slim	2-3/4" [70mm] x2
	SLB660DBHx	Double Horizontal	3-1/4" [83mm] x2
	SLB660DBVx	Double Vertical	3" [76mm] x2
	SLDB38xx	Double Universal 38mm	2-1/2" [64mm] x2
	SLDB48xx	Double Universal 48mm	2-3/4" [70mm] x2
	RB12-2501-069138	ESU LX 1-1/2"	3" [76mm]
	RB12-2503-069140	ESU LX 40mm	3" [76mm]
R-Series	RB360xx	R3-R8 1-1/2"	2-3/4" [70mm]
	RB380xx	R3-R8 2"	3-3/4" [95mm]
	RB390xx	R3-R8 2-7/8"	5-1/2" [140mm]
	RB560xx	R16 1-1/2"	3" [76mm]
	RB580xx	R16-24 2"	4" [102mm]
	RB590	R16-24 2-7/8"	5-1/2" [140mm]
	RBGALxx	Heavy Duty	4" [102mm]
S45	RB09-0352-069040	LX 40mm	3" [76mm]
	RB09-0352-069055	LX 55mm	4" [102mm]
	RB40-9355-xxx040	LX 40mm Automate	3" [76mm]
	RB40-9355-xxx050	LX 55mm Automate	4" [102mm]
	RB09-8384-xxx122	Double Square	2-3/4" [70mm] x2
	RB09-8395-xxx148	Double Slim Profile Top Front LH	2-3/4" [70mm] x2
	RB09-8396-xxx148	Double Slim Profile Top Front RH	2-3/4" [70mm] x2
S60	RB10-6500-xxx001	RB10 Idler	4" [102mm]
	RB56-7103-xxx060	M50 Universal Motor 60mm	4" [102mm]
	RB56-7103-xxx080	M50 Universal Motor 80mm	6-1/2" [165mm]
	RB56-7301-xxx061	Idle End Adjustable 60mm Top/Ceiling	4" [102mm]
	RB56-7301-xxx081	Idle End Adjustable 80mm Top/Ceiling	6-1/2" [165mm]
	RB56-7123-xxx060	Double Universal Motor Base Top/Ceiling LH	3-1/2" [89mm]
	RB56-7124-xxx060	Double Universal Motor Base Top/Ceiling RH	3-1/2" [89mm]
	RB56-7621-xxx060	Double Idle End Non Adjustable Top/Ceiling LH	3-1/2" [89mm]
	RB56-7622-xxx060	Double Idle End Non Adjustable Top/Ceiling RH	3-1/2" [89mm]
	RB56-7323-xxx061	Double Idle End Adjustable Top/Ceiling LH	3-1/2" [89mm]
	RB56-7324-xxx061	Double Idle End Adjustable Top/Ceiling RH	3-1/2" [89mm]
	RB56-7102-xxx060	M50 Somfy 50 Star Head Motor	4" [102mm]

©Copyright All Rights Reserved Rollease Acmeda

ROLLEASE ACMEDA LINKED SHADE DEDUCTIONS

SYSTEM	DEDUCTION
SKYLINE EASY-LINK	3/4" [19mm]
S45 EASY-LINK	11/16" [17mm]
INFINITE LINK	11/16" [18mm]
PIN TO PIN	9/16" [14mm]

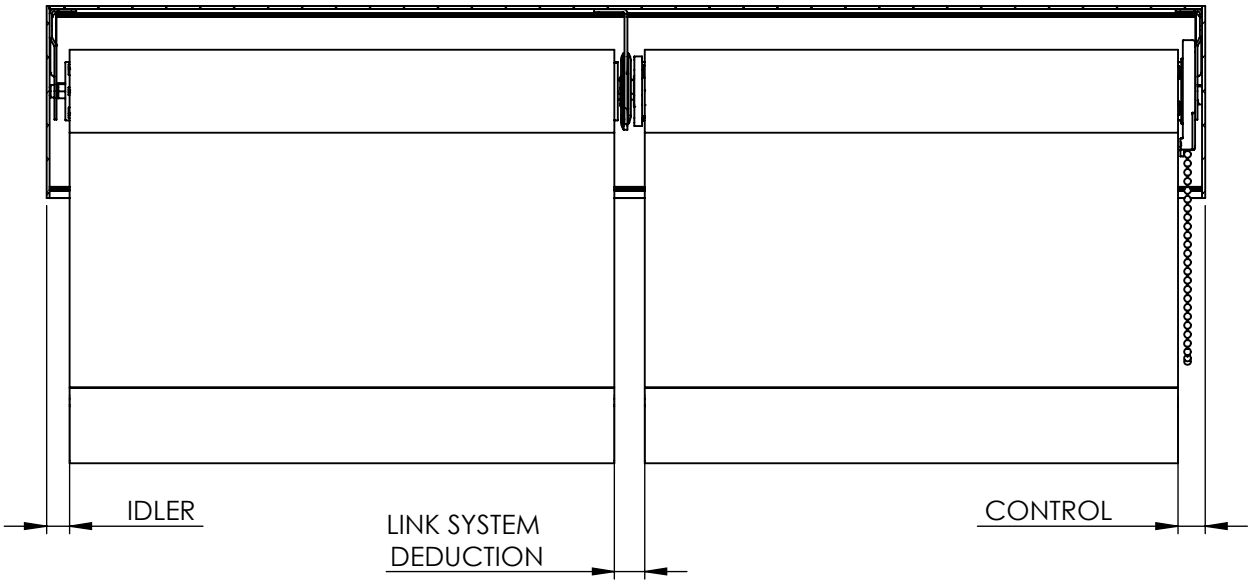

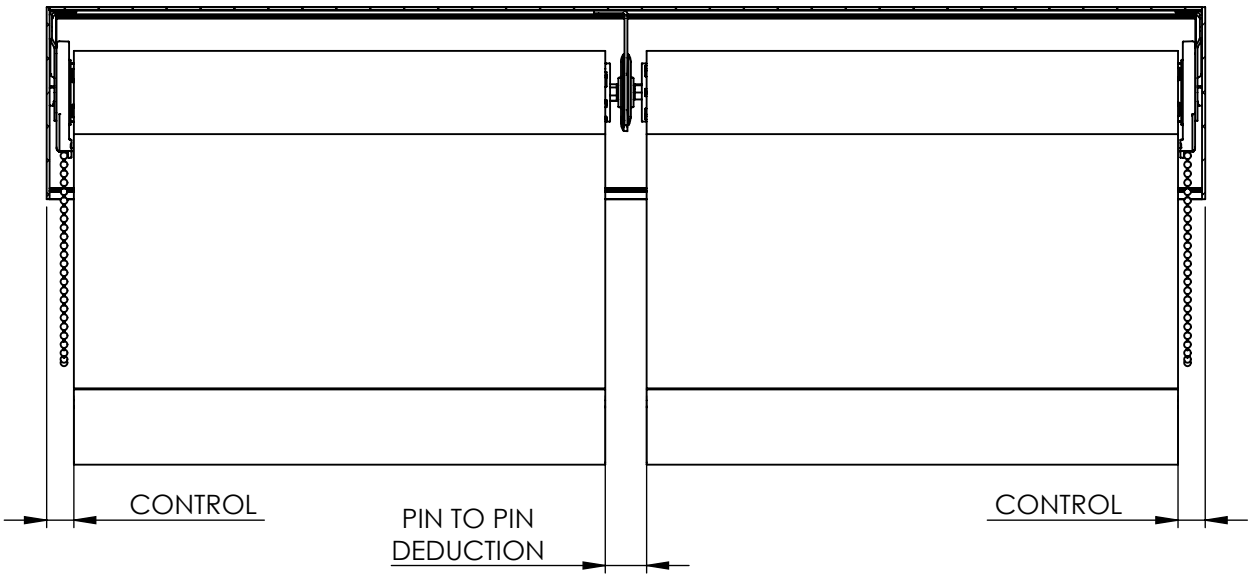

©Copyright All Rights Reserved Rollease Acmeda

ADD-ON | BOTTOM CLOSURES

AP-44 | 4" X 5" POCKET

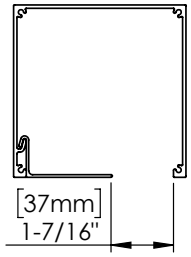

2" RETURN:
RCCP-8006-075305

AP-55 | 5" X 5" POCKET

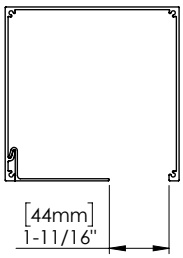

2" RETURN:
RCCP-8006-075305

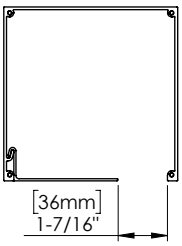

3" RETURN:
RCCP-8003-075305

AP-66 | 6" X 6" POCKET

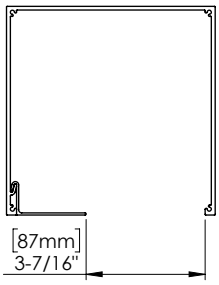

2" RETURN:
RCCP-8006-075305

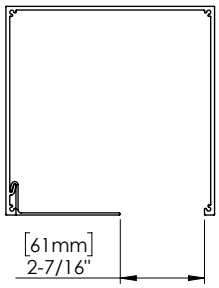

3" RETURN:
RCCP-8003-075305

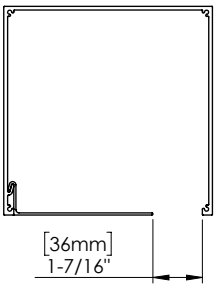

4" RETURN:
RCCP-8004-075305

AP-79 | 7" X 9" POCKET

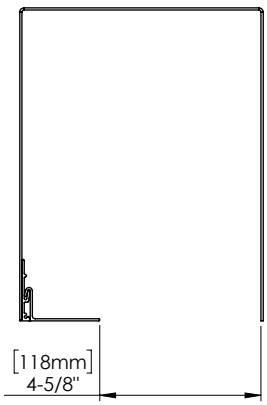

2" RETURN:
RCCP-8006-075305

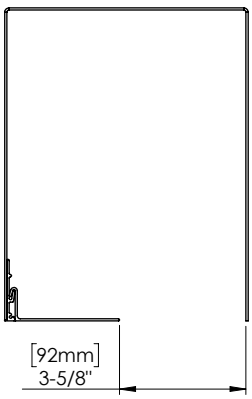

3" RETURN:
RCCP-8003-075305

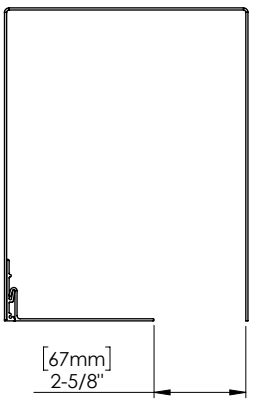

4" RETURN:
RCCP-8004-075305

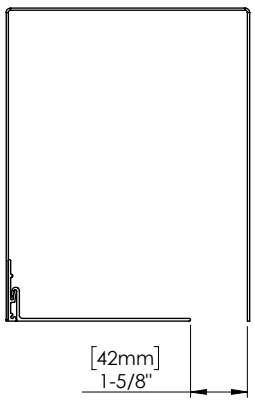

5" RETURN:
RCCP-8005-xxx305

©Copyright All Rights Reserved Rollease Acmeda

POCKET INSTALLATION BEST PRACTICES

SCREW MOUNTING POSITIONS

Rollease Acmeda recommends the following best practices when installing commercial recessed Pockets:

- Always install screws through top of Pocket
- Use #8 self-tapping screws when possible
- When making field alterations, use a saw blade designed to cut non-ferrous metal.

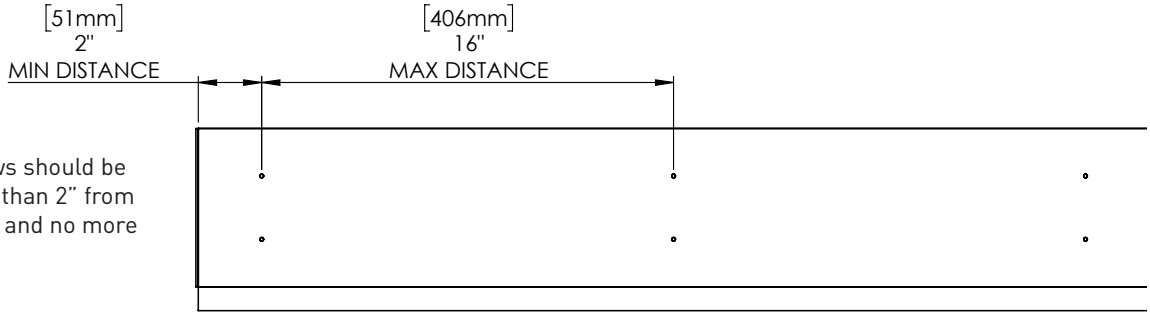

Mounting screws should be located no less than 2" from ends of Pocket, and no more than 16" apart.

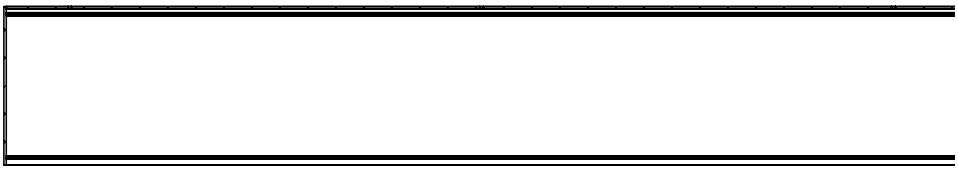

INSTALLATION

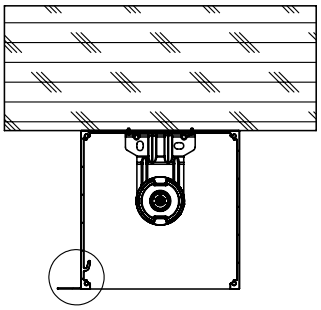

Always make sure that mounting screws are securely tightened into the blocking or material that the Pocket is being mounted to.

Always install screws through top of Pocket

Use #8 self-tapping screws when possible

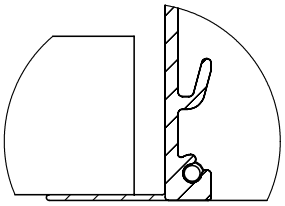

Use the tile lip to hide rough finishes.

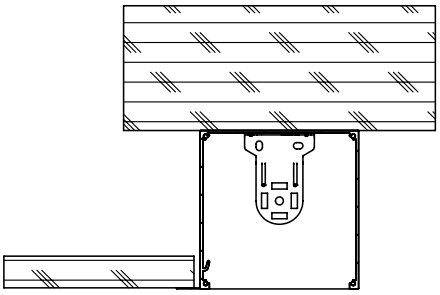

Do not mount shade brackets to endplates. Install brackets into blocking or building material directly.

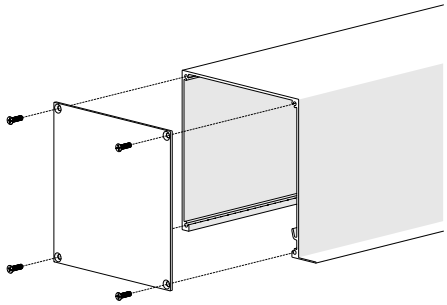

For installing end plates use:
CSDCSW or CSDCS for 5" & 6" end plate
RCEPS100x for 7"x 9" end plate

©Copyright All Rights Reserved Rollease Acmeda

FIELD ALTERATIONS

CUTTING POCKET TO SIZE

- Pockets can be cut to size while on-site.
- Use a saw blade specified for cutting non-ferrous metal.

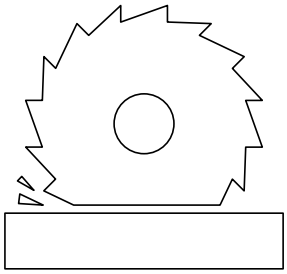

CONNECTING TWO POCKETS WITH PINS

- Insert 4 pins into the pocket.
- Connect the second pocket to the first via the 4 pins.

NOTE: A small hammer may be required.

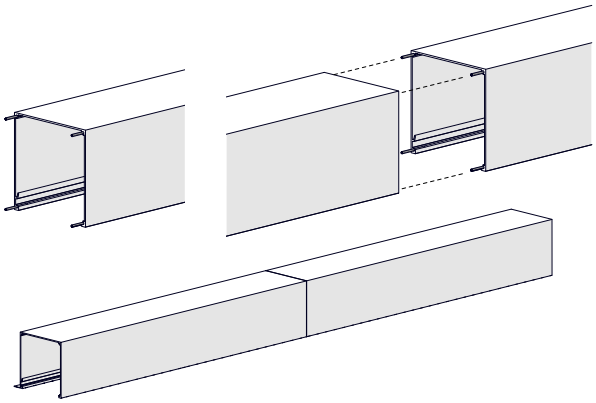

TENSIONERS AND SHROUDS

Slide the shroud on the chane and then attached the chain tensioner as shown below:

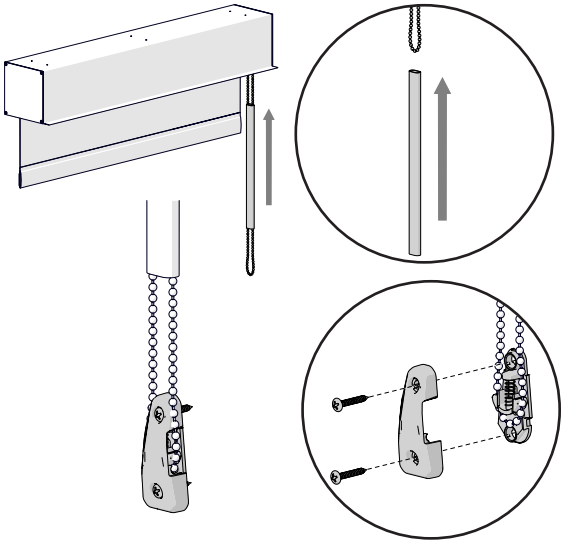

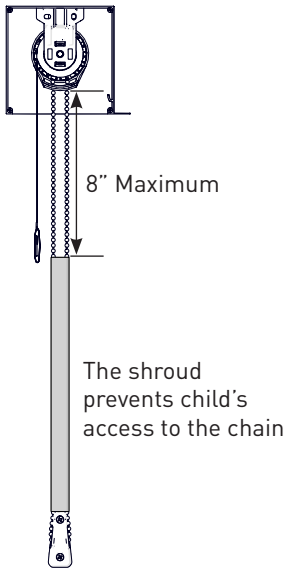

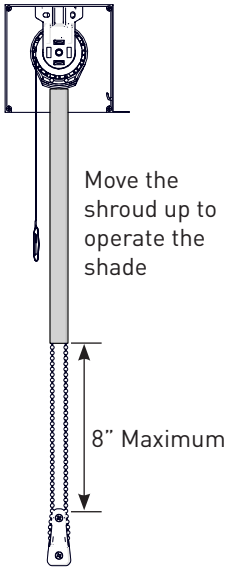

DIVERTERS

Use proper diverter to ensure cord/chain can exit pocket and closure without getting caught on the closure panel.

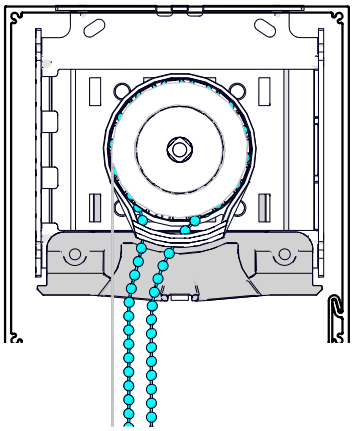

Image shown:
AP-66T pocket with 5" fascia bracket and 3" bottom closure.

©Copyright All Rights Reserved Rollease Acmeda

MAKING A CORNER

- To create a seamless corner, cut end at 45°.
- On second pocket piece, cut end at 45° opposite first cut.
- Abut the two pieces to match the corner.

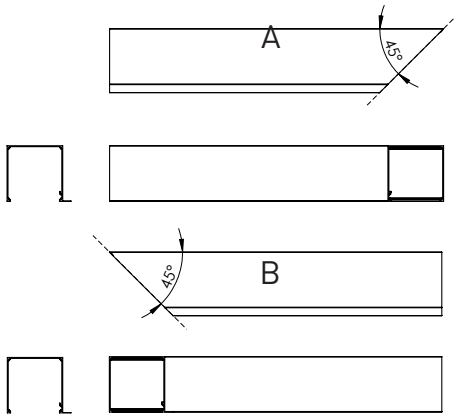

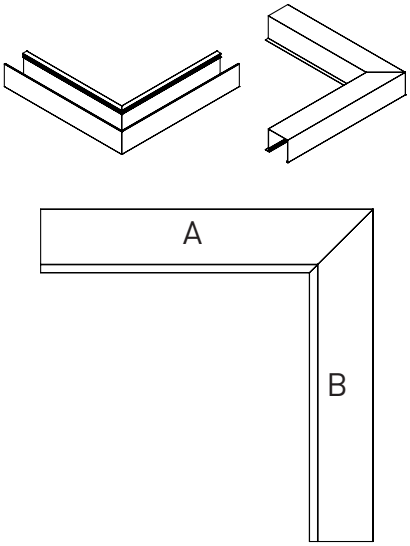

NOTCHING THE CLOSURE PANEL

If the shade system's clutch hangs below the closure panel, use snips to notch the end of the closure panel at the clutch.

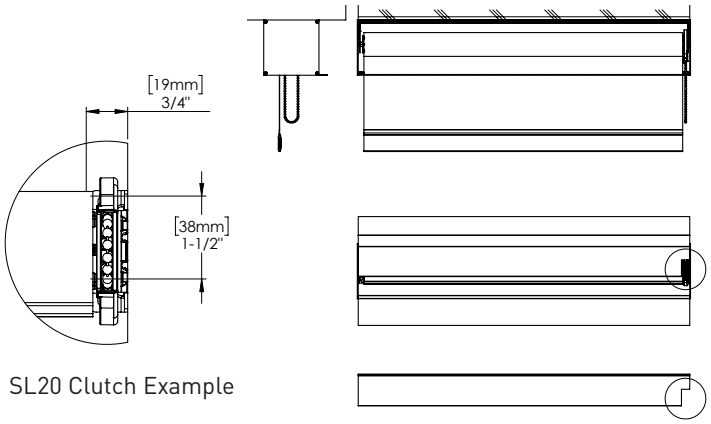

SL20 Clutch Example

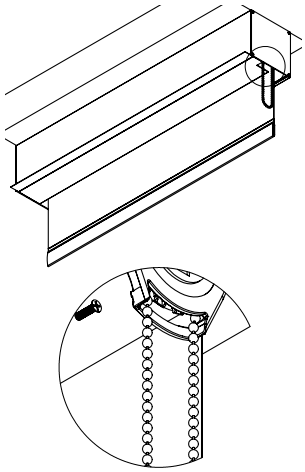

SECTION D | SUPPORT

ROLLEASE ACMEDA
USA

750 East Main Street, 7th Floor
Stanford, CT 06902

T +1 203 964 0513 | F +1 800 552 5100

contract@rolleasacmeda.com

rolleaseacmedacontract.com

©Copyright All Rights Reserved Rollease Acmeda