Nice

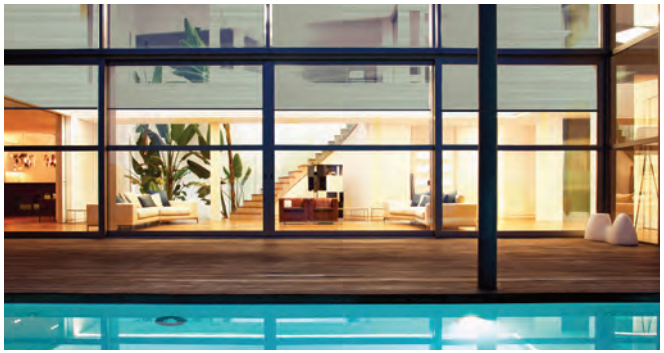

Sun Shades

ROLLER SHADE PRODUCT INFORMATION GUIDE

For Custom Installation Professionals

Redefining Elegance and Innovation in Every Shade

At Nice Sun Shades, we craft sophistication and cutting-edge technology for the discerning luxury homeowner. Our exquisite range of interior and exterior window shades combines unmatched fabric artistry with our proprietary motorized shade technology. Unlike many shade brands that source motors, hardware, and fabrics from third-party manufacturers, Nice Sun Shades uses our own advanced motors for superior reliability and seamless integration.

A harmonious blend of superior aesthetics, proprietary technology, and innovative design, Nice Sun Shades redefines luxury window treatments. This fusion creates a distinct brand identity that resonates with luxury homeowners seeking unparalleled elegance, customization, and cutting-edge functionality.

About This Professional Guide

This comprehensive technical guide provides detailed specifications, ordering information, and installation guidance for custom installation professionals. Whether you're designing for a single room or outfitting an entire luxury residence, you'll find everything needed to specify and install the perfect shade solution.

Nice
Sun Shading Solutions

2026 Product Guide

Contents

System Overview 9
Fabric Collections 15
Hardware Options 23
Manual Control Systems 29
Motorization 33
Control Options 43
Technical Specifications 49
Measuring & Installation 53
Warranty & Care 59
Ordering Information 65

What Sets Nice Sun Shades Apart

Proprietary Nice Era Inn Motor Technology

Unlike competitors who rely on third-party components, Nice Sun Shades designs and manufactures our own best-in-class motorized shade systems.

Our Motor Advantage

- **In-house manufacturing** to our exact specifications
- **Direct quality control** and technical support
- **Seamless integration** with all hardware systems
- **Ultra-quiet operation** at less than 35 dBA
- **7-year warranty** on wired motors, 5-year on battery powered
- **Three advanced motor families:** ERA INN EDGE, ERA INN EDGE S Li-ion, and ERA INN SMART

This proprietary approach ensures smooth, reliable, whisper-quiet operation with unmatched performance and longevity that third-party motors simply cannot match.

Revolutionary COLOR Fabric System

Our innovative printing technology transforms the industry standard, ensuring consistent availability and unlimited customization opportunities that competitors cannot offer.

The COLOR Advantage

- **Over 350 pattern and color combinations** across 18 base fabrics
- **Four opacity levels:** Sheer, Solar Screen, Light-Filtering, Blackout
- **On-demand color printing** eliminates stock-out and discontinuation issues
- **COLOR Plus:** Access to 1,500+ Sherwin Williams color options
- **COLOR Custom**: Create completely unique patterns and graphics
- **Consistent availability** unlike competitors dependent on third-party fabric suppliers

This revolutionary approach means your clients never face discontinued fabrics or out-of-stock colors that plague traditional shade suppliers.

Exquisite Finish and Detailing

Meticulous attention to details such as stitching, hemming, and material quality delivers an unparalleled luxurious feel for both interior and exterior applications. Each shade is a masterpiece of quality, innovation, and style.

Complete System Integration

Single-Source Excellence

- Hardware, motors, and fabrics designed to work together seamlessly
- Simplified ordering and installation processes
- Unified warranty and support
- Limited Lifetime Warranty on shade components

Smart Home Integration

Full compatibility with leading smart home systems, offering seamless control and automation tailored to the needs of luxury homeowners:

- Remote control operation
- Smartphone app control via Nice ELAN Control
- Advanced system integration for sophisticated home automation

Premium Market Positioning

Nice Sun Shades is positioned at the top tier of the market, reflecting the premium quality, exclusivity, and innovative technology of our products. We target luxury homeowners who demand the highest standards in design, technology, and craftsmanship.

Our Value Proposition

- Superior durability and energy efficiency
- Timeless design with limitless customization
- Reliability of Nice's proprietary motors
- Unmatched flexibility of our COLOR fabric system
- Long-term value for discerning clients

System Overview

THE Nice SUN SHADES COMPLETE SOLUTION

Nice Sun Shades represents a paradigm shift in luxury window treatments. Our roller shade system delivers a harmonious blend of superior aesthetics, proprietary technology, and innovative design that sets a new standard in the industry. Unlike competitors who rely on third-party motors, hardware, and limited fabric suppliers, Nice Sun Shades controls every aspect of the design and manufacturing process, from our advanced Nice Era Inn motors to our revolutionary COLOR fabric printing technology.

This vertical integration ensures unparalleled quality control, superior performance, and limitless customization possibilities that discerning luxury homeowners demand.

What Sets Nice Sun Shades Apart

Proprietary Nice Era Inn Motor Technology

The Foundation of Superior Performance

At the heart of every Nice Sun Shades motorized system lies our proprietary Nice Era Inn motor technology. While competitors source motors from third-party manufacturers, we design, engineer, and manufacture our motors to exacting specifications, ensuring performance that simply cannot be matched.

Our Motor Advantage

Best-in-Class Engineering

- Designed and manufactured in-house to Nice's exacting standards
- Three advanced motor families: ERA INN EDGE, ERA INN EDGE S Li-ion, and ERA INN SMART
- Ultra-quiet operation at less than 35 dBA for whisper-silent luxury
- Electronic limit switches for precise, reliable positioning
- Advanced obstacle detection for safety and longevity

Direct Quality Control

- Every motor tested to rigorous quality standards
- Seamless integration with all Nice hardware systems
- Direct technical support from the engineering team
- Continuous innovation and improvement

Superior Warranty Protection

- 7-year warranty on wired motors (AC and DC)
- 5-year warranty on battery-powered motors
- Reflects our confidence in manufacturing quality
- Industry-leading coverage from the source

Advanced Features

- Adjustable speed, soft start/soft stop
- Programmable intermediate heights
- TTBus and Bus T4 technology for sophisticated automation
- Battery-powered options for retrofit applications

This proprietary approach delivers smooth, reliable, whisper-quiet operation with unmatched performance and longevity—a level of excellence that third-party motor systems simply cannot achieve.

What Sets Nice Sun Shades Apart

Revolutionary COLOR Fabric System

Where Luxury Meets Limitless Possibilities

The Nice Sun Shades COLOR fabric system transforms the traditional limitations of window treatment design. Our innovative on-demand printing technology eliminates the stock-outs, discontinuations, and limited selections that plague competitors who rely on common fabric suppliers.

The COLOR Advantage

Unprecedented Selection

- Over 350 pattern and color combinations across 18 premium base fabrics
- Four opacity levels: Sheer, Solar Screen, Light-Filtering, and Blackout
- Eight standard colors printed on-demand at time of order
- Every fabric style curated for luxury applications

Limitless Customization (COLOR Plus)

- Access to 1,500+ Sherwin Williams color options
- Mix and match patterns from any fabric with any color
- Perfect color matching for any design palette
- No minimum order quantities

Truly Bespoke Design (COLOR Custom)

- Create completely unique patterns not available anywhere else
- Print custom graphics, artwork, or branded designs
- Transform architectural renderings into reality
- Bring client's vision to life with unprecedented flexibility

Guaranteed Availability

- On-demand printing eliminates discontinued fabrics
- No stock-out issues that delay projects
- Consistent quality and color matching
- Future-proof design selections

Exquisite Quality

- Meticulous attention to stitching, hemming, and finishing
- Premium materials selected for durability and aesthetics
- Flame-retardant options available for commercial applications
- UV-resistant treatments for lasting beauty

Unlike competitors dependent on third-party fabric suppliers with unpredictable availability, Nice Sun Shades' revolutionary approach ensures your design vision is never compromised by supply chain limitations.

What Sets Nice Sun Shades Apart

Complete System Integration

Seamless Excellence from Design to Installation

Nice Sun Shades provides a unified ecosystem where hardware, motors, and fabrics are designed to work together flawlessly. This complete system integration delivers benefits that piecemeal solutions cannot match.

Unified Design Philosophy

- Every component engineered for optimal compatibility
- Hardware profiles complement motor specifications
- Fabric weights matched to motor torque capabilities
- Cohesive aesthetic across all elements

Simplified Professional Experience

- Single-source ordering streamlines procurement
- Comprehensive technical documentation
- Consistent quality across all components
- Reduced complexity in specification and installation

Single-Source Warranty and Support

- Limited Lifetime Warranty on shade components
- 7-year warranty on wired motors, 5-year on battery powered
- Direct access to engineering and technical support
- No finger-pointing between multiple manufacturers
- Comprehensive protection for your clients' investment

Smart Home Ecosystem Integration

- Native compatibility with leading smart home platforms
- Sophisticated automation and scheduling capabilities
- Seamless integration with lighting, climate, and security systems

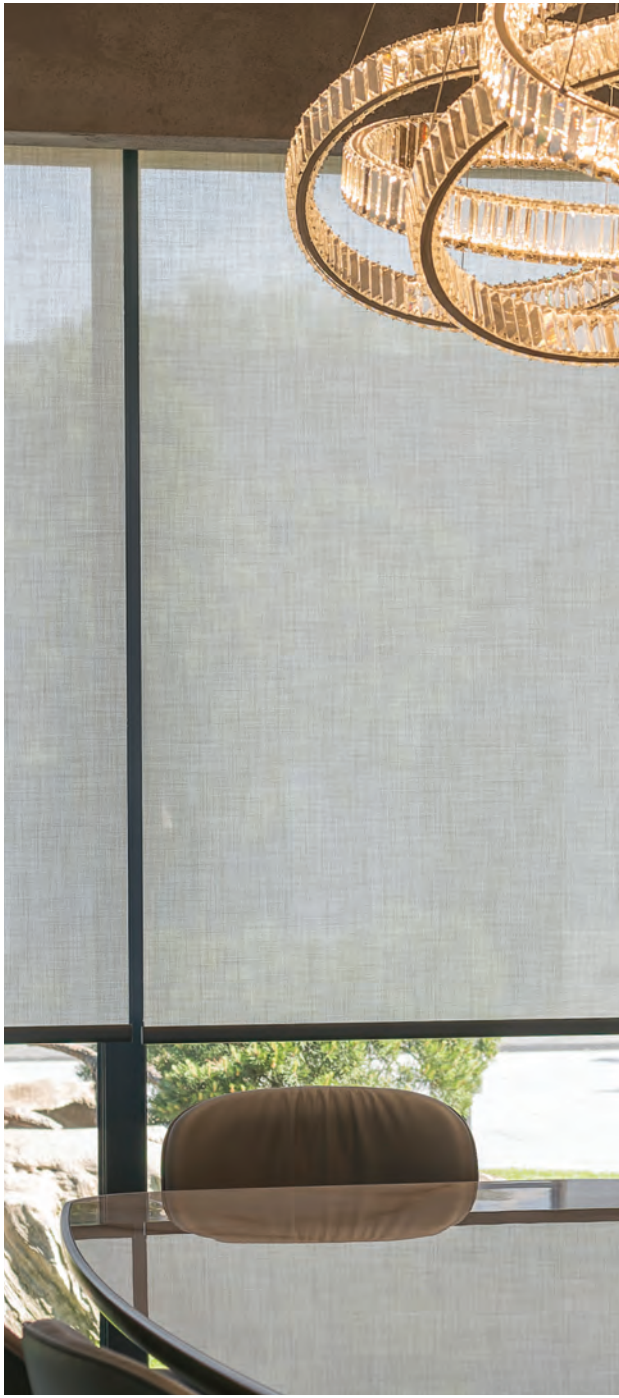

The Nice Sun Shades Difference in Action

Energy Efficiency and Sustainability

Nice Sun Shades contributes to sustainable, comfortable living environments:

- Light-filtering fabrics reduce cooling loads while maintaining natural light
- Blackout fabrics provide superior insulation
- Solar screen options block UV radiation and heat gain
- Motorization enables automated response to sun position and temperature
- Long-lasting quality reduces replacement waste

Safety Without Compromise

Safety features are integrated into design, never added as afterthoughts:

- Cordless operation options eliminate strangulation hazards
- Motorized systems provide safest operation
- Obstacle detection prevents injury and damage
- Child-safe design elements comply with ANSI standards
- Fail-safe mechanisms ensure reliable protection

The Luxury Experience

Every Nice Sun Shades system delivers the sophistication and refinement that luxury homeowners expect:

- Whisper-quiet operation preserves serenity
- Precise positioning for perfect light control
- Seamless aesthetic integration with high-end interiors
- Effortless smart home control
- Meticulous attention to every detail

Positioned Alongside Industry Leaders

Nice Sun Shades is positioned at the top tier of the luxury window treatment market. However, our proprietary motor technology and revolutionary COLOR fabric system provide competitive advantages that set us apart:

vs. Third-Party Motor Systems

- Direct manufacturing control ensures superior quality and support
- Advanced features and ultra-quiet operation
- Industry-leading 7-year warranty reflects manufacturing confidence
- Seamless integration eliminates compatibility issues

vs. Traditional Fabric Supply

- Unlimited customization vs. limited pre-selected options
- Guaranteed availability vs. stock-outs and discontinuations
- On-demand printing vs. inventory limitations
- Future-proof selections vs. obsolescence risk

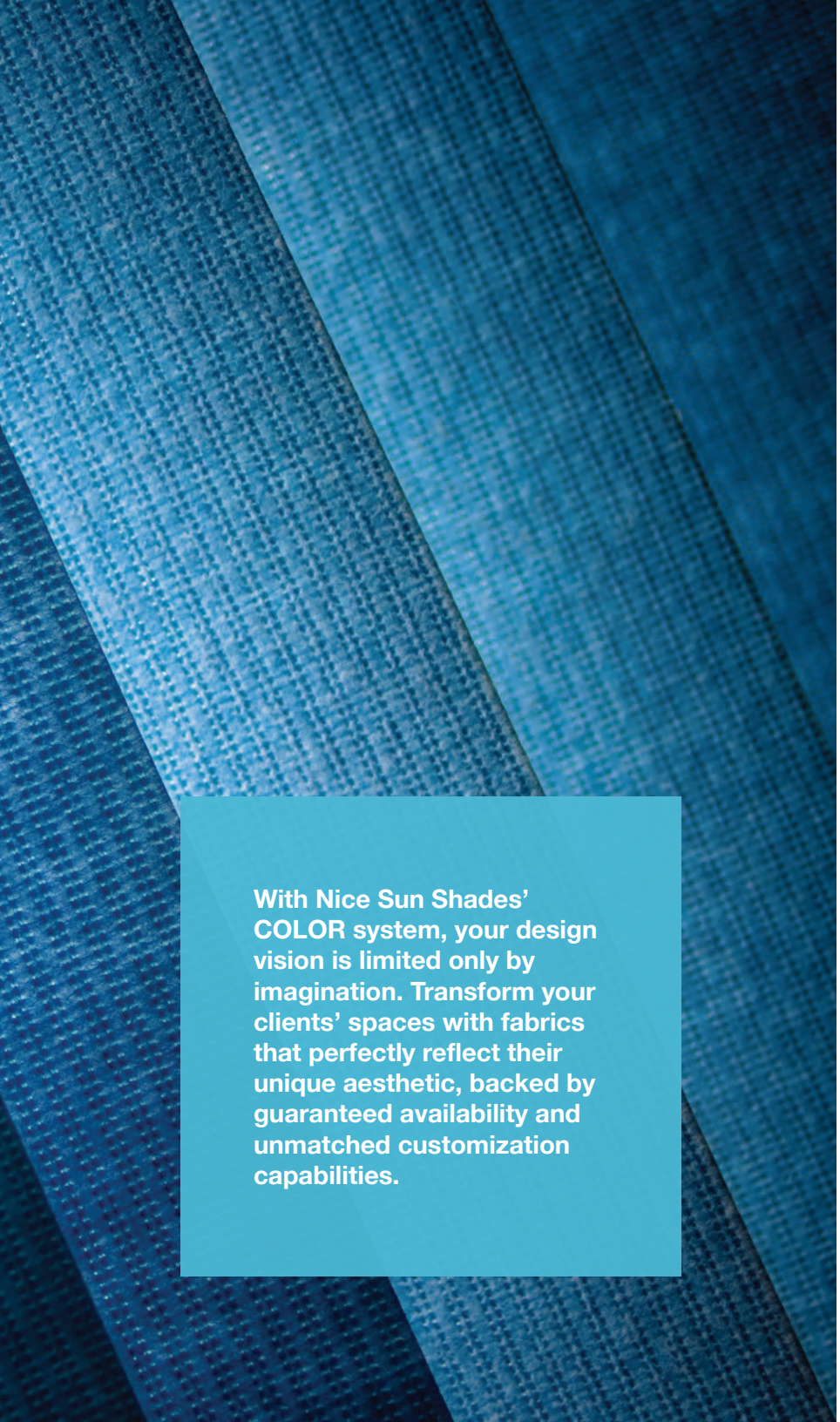

With Nice Sun Shades' COLOR system, your design vision is limited only by imagination. Transform your clients' spaces with fabrics that perfectly reflect their unique aesthetic, backed by guaranteed availability and unmatched customization capabilities.

Fabric Collections

THE COLOR REVOLUTION: LIMITLESS CUSTOMIZATION FOR LUXURY LIVING

Nice Sun Shades' revolutionary COLOR fabric system represents a fundamental shift in how luxury window treatments are designed and delivered. Our innovative on-demand printing technology eliminates the constraints of traditional fabric inventory systems, offering your clients truly unlimited design possibilities.

Opacity Options for Every Lifestyle

SOLAR SCREEN

Performance Meeting Sophistication

Premium solar screen fabrics offer intelligent light management without sacrificing style:

- UV protection with openness factors: 1%, 3%, 5%, 8%, 10%
- Maintains outward visibility while protecting interiors
- Reduces heat gain and glare for enhanced comfort
- Preserves views while blocking harmful UV radiation
- Flame retardant rated options available for commercial applications
- Energy-efficient performance contributes to sustainability goals

BLACKOUT

Complete Control for Ultimate Privacy

Blackout fabrics deliver maximum light control for spaces requiring darkness and privacy:

- Complete light blockage for optimal sleeping environments
- Maximum privacy for bedrooms and media rooms
- Superior insulation properties enhance energy efficiency
- Room darkening performance for home theaters
- Ideal for shift workers or light-sensitive individuals

LIGHT-FILTERING

The Perfect Balance

Light-filtering fabrics provide the ideal equilibrium between privacy and natural illumination:

- Softened natural light creates comfortable, glare-free environments
- Enhanced privacy without complete room darkening
- Versatile performance for bedrooms, offices, and multi-use spaces
- Reduced glare protects furnishings and artwork
- Maintains gentle connection to outdoor lighting conditions

Material Collection Chart

Our curated collection of 18 premium base fabrics offers exceptional performance and aesthetic versatility. Each fabric is available with our revolutionary COLOR printing technology for unlimited customization possibilities.

Premium Fabric Specifications

SOLAR SCREEN FABRICS

SOLARE SCREEN PLUS 1%

Width	118"
Openness	1%
FR Rated	Yes
Price Group	5 (Non-printed: 2)
Railroadable	Yes
Printable	Yes
Texture	Maximum solar protection with view preservation

SOLARE SCREEN PLUS 3%

Width	118"
Openness	3%
FR Rated	Yes
Price Group	5 (Non-printed: 1)
Railroadable	Yes
Printable	Yes
Texture	Balanced solar control and visibility

SOLARE SCREEN PLUS 5%

Width	118"
Openness	5%
FR Rated	Yes
Price Group	4 (Non-printed: 1)
Railroadable	Yes
Printable	Yes
Texture	Enhanced view with effective solar management

SOLARE SCREEN - SOLID

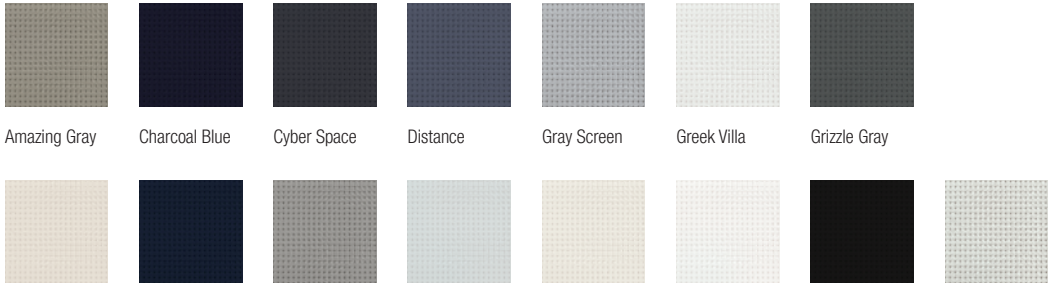

Amazing Gray, Charcoal Blue, Cyber Space, Distance, Gray Screen, Greek Villa, Grizzle Gray

Natural Linen, Naval, Requisite Gray, Sea Salt, Shoji White, Snowbound, Tricorn Black, White

SOLARE SCREEN - KENYA

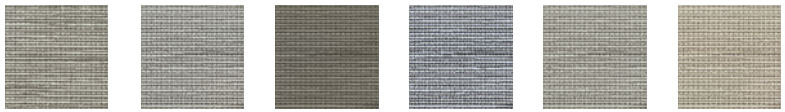

Ash, Dust, Grain, Ink, Oyster, Sand

SOLARE SCREEN - RUSSELL

Bone, Buff Fox, Neutral Gray, Rhino, Shadow

Note: White and non-printed materials are priced one or more price groups lower than printed materials, offering cost-effective luxury options

Material Collection Chart

LIGHT-FILTERING FABRICS

White

TONTINE LIGHT FILTERING

Width	98”
Price Group	3 (White: 2)
Railroadable	Yes
Printable	No
Texture	Elegant texture with railroading flexibility

White

ESTHER LIGHT FILTERING

Width	118”
Price Group	4 (White: 3)
Railroadable	No
Printable	No
Texture	Refined texture with superior light management

TONTINE LIGHT FILTERING - SOLID

Amazing Gray

Charcoal Blue

Cyber Space

Distance

Gray Screen

Greek Villa

Grizzle Gray

Natural Linen

Naval

Requisite Gray

Sea Salt

Shoji White

Snowbound

Tricorn Black

ESTHER LIGHT FILTERING - SOLID

Amazing Gray

Charcoal Blue

Cyber Space

Distance

Gray Screen

Greek Villa

Grizzle Gray

Natural Linen

Naval

Requisite Gray

Sea Salt

Shoji White

Snowbound

Tricorn Black

TONTINE LIGHT FILTERING - KENYA

Ash

Dust

Grain

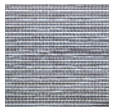

Ink

Oyster

Sand

ESTHER LIGHT FILTERING - KENYA

Ash

Dust

Grain

Ink

Oyster

Sand

TONTINE LIGHT FILTERING - RUSSELL

Bone

Buff Fox

Neutral Gray

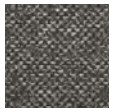

Rhino

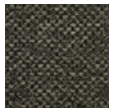

Shadow

ESTHER LIGHT FILTERING - RUSSELL

Bone

Buff Fox

Neutral Gray

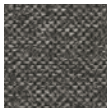

Rhino

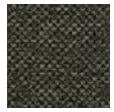

Shadow

Material Collection Chart

BLACKOUT FABRICS

White

TONTINE BLACKOUT

Width	98”
Price Group	5 (White: 4)
Railroadable	Yes
Printable	No
Texture	Compact width with full blackout capability

Amazing Gray

Charcoal Blue

Cyber Space

Distance

Gray Screen

Greek Villa

Grizzle Gray

Natural Linen

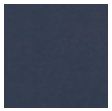

Naval

Requisite Gray

Sea Salt

Shoji White

Snowbound

Tricorn Black

White

ESTHER BLACKOUT

Width	118”
Price Group	6 (White: 5)
Railroadable	No
Printable	No
Texture	Luxurious texture with complete light blockage

White

RUSSELL BLACKOUT

Width	94.5”
Price Group	6 (White: 5)
Railroadable	Yes
Printable	No
Texture	Versatile blackout performance with railroading

Note: White and non-printed materials are priced one or more price groups lower than printed materials, offering cost-effective luxury options

Color Customization

Unlimited Design Possibilities

The COLOR System Advantage

Unlike traditional shade manufacturers limited by pre-selected fabric inventories, Nice Sun Shades' revolutionary COLOR system prints your chosen design on-demand at the time of order. This transformative approach eliminates the frustrations of discontinued patterns, out-of-stock colors, and limited design options.

Memo Sample Pricing

Confirm your custom design before committing to full shades:

- **6" x 12":** $12.00
- **12" x 12":** $18.00
- **24" x 24":** $25.00
- **48" x 48":** $66.00

Memo samples provide accurate representation of fabric texture, pattern clarity, and color accuracy, ensuring complete client satisfaction before production.

COLOR Plus: Custom Color Requests

Transform Any Fabric with Your Perfect Color

COLOR Plus unlocks access to over 1,500 Sherwin Williams color options, enabling perfect color matching for any design palette:

Unlimited Possibilities

- Select patterns or colors from different fabrics in our collection
- Match any Sherwin Williams color precisely
- Create custom color combinations not available anywhere else
- Coordinate perfectly with paint, furnishings, and finishes

Professional Process

- Select your base fabric from our 18 premium options
- Choose your desired pattern and color combination
- Submit request for written approval
- Receive color-accurate memo sample for client approval
- Order with confidence knowing exact results

No Compromises

- No minimum order quantities
- Consistent color matching across multiple orders
- Future re-orders guaranteed identical to original
- Design vision never limited by fabric availability

COLOR Custom: Bespoke Pattern Creation

Bring Any Vision to Life

COLOR Custom represents the ultimate in luxury customization, enabling creation of completely unique patterns and designs:

Limitless Creative Freedom

- Create entirely new patterns not in our collection
- Reproduce existing patterns, artwork, or graphics
- Design custom branded elements for commercial projects
- Transform architectural renderings into physical reality
- Print photography, digital art, or hand-drawn designs

Professional Design Services

- Our team assists with pattern development
- Technical guidance ensures optimal results
- File preparation and color management included
- Proof samples available before full production

Unique Applications

- Custom corporate branding for commercial spaces
- Personalized residential designs reflecting client style
- Artistic installations and statement pieces
- Historical reproductions for restoration projects
- Architectural coordination with building elements

Investment in Excellence

- Additional labor charges apply for custom pattern development
- Setup fees may apply depending on complexity
- Contact customer service for detailed quoting
- Memo samples ensure perfect results

Fabric Orientation Guide

Standard Orientation

Shades ordered within the maximum width of the fabric are manufactured with fabric vertically oriented, providing optimal pattern alignment and seam-free appearance.

Railroaded Orientation (Material Turned)

For shades wider than maximum fabric width, fabric is turned width-for-height (horizontally oriented). This technique maximizes size capabilities while maintaining aesthetic excellence.

Important Notes

- Only applies to fabrics designated as “Railroadable”
- Pattern orientation changes from vertical to horizontal
- Visible seam locations may vary when material is railroaded
- Nice Sun Shades places seams at highest possible location for minimal visibility

Railroaded with Seams

For shades exceeding both maximum fabric width and height, visible seams are required:

- Seams positioned for minimal visual impact
- Location optimized based on shade size and application
- Seam matching available for multiple shades
- If customer requires seam on smaller shades to match larger shades requiring seams, add 10% to price of smaller shades

Fabric Care and Quality

All Nice Sun Shades fabrics feature specialized treatments for enhanced performance:

- Dust and dirt repellent coatings
- UV-resistant treatments for long-lasting color
- Flame-retardant options where specified
- Premium quality construction throughout

Our revolutionary on-demand printing ensures consistent quality and color accuracy across all orders, eliminating the batch-to-batch variations common with traditionally manufactured fabrics.

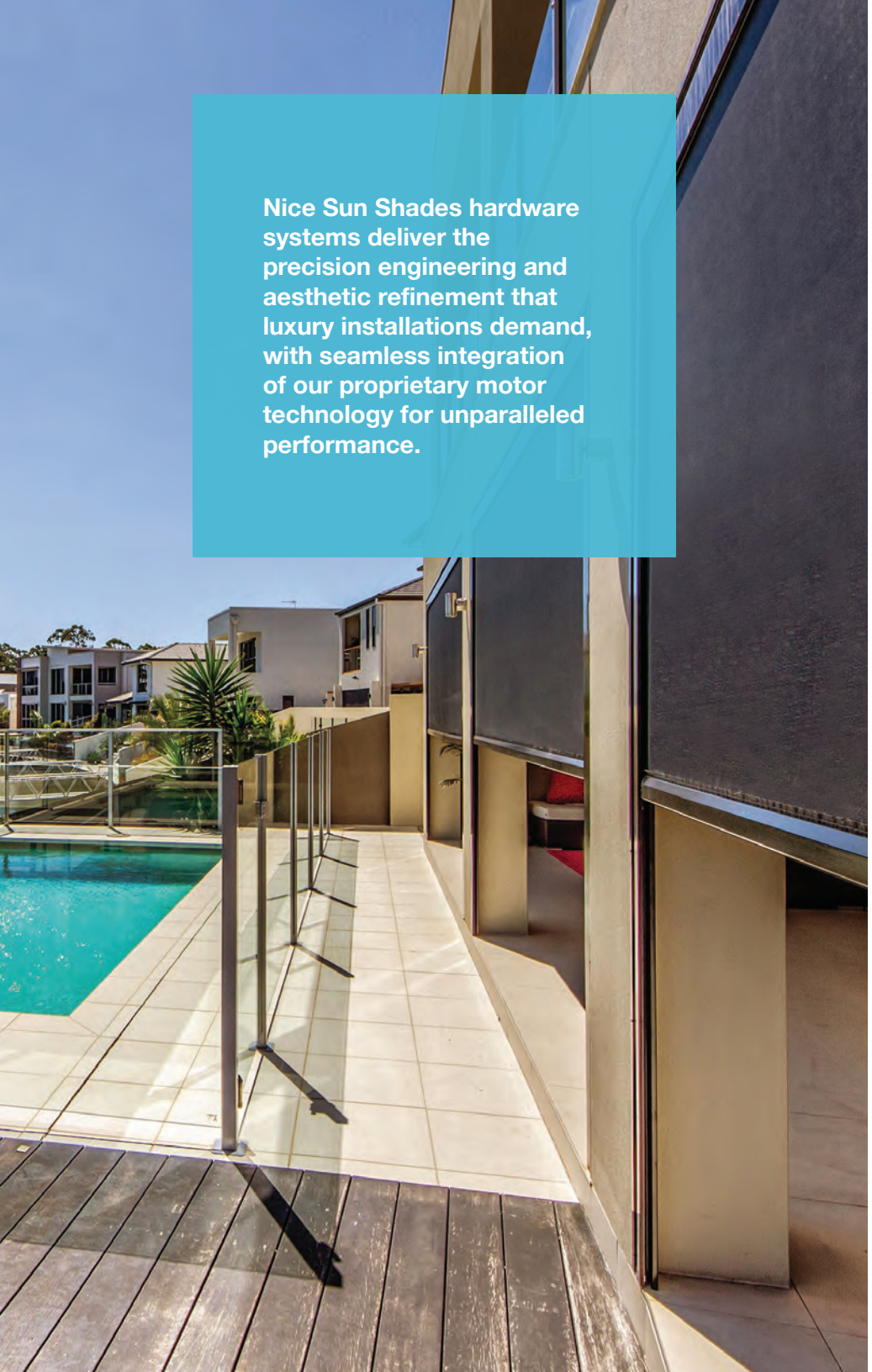

Nice Sun Shades hardware systems deliver the precision engineering and aesthetic refinement that luxury installations demand, with seamless integration of our proprietary motor technology for unparalleled performance.

Hardware Options

PRECISION-ENGINEERED LUXURY HARDWARE

Nice Sun Shades hardware systems exemplify our commitment to superior aesthetics and seamless design integration. Each hardware option is precision-engineered to complement our proprietary motor technology while delivering the refined, luxurious presence that discerning clients expect.

Cassette Systems

Refined Concealment

Our cassette systems combine functional excellence with sophisticated aesthetics, concealing shade mechanisms within elegant profiles that enhance any interior design.

Medium Cassette (100)

Refined Profile for Seamless Integration

The Medium Cassette offers elegant concealment in a compact dimension perfect for most applications:

SPECIFICATIONS

Dimensions	3.625 x 3 inches (WxH)
Available Colors	White, Vanilla, Black, Bronze, Clear Anodized
Compatible Controls	Chain, Cordless, Cordless Plus, Motorization
Roll Styles	Standard or Reverse
Fabric Wrap	Available for Enhanced Customization

DESIGN EXCELLENCE

- Sleek profile maintains clean, modern aesthetic
- Fabric insert strip conceals mechanism
- Fabric insert coordinates with shade material
- Precision engineering ensures quiet operation
- Integrated mounting system simplifies installation

Large Cassette (120)

Enhanced Coverage for Larger Applications

The Large Cassette provides increased coverage for applications requiring greater mechanism concealment:

SPECIFICATIONS

Dimensions	3.75 x 3.625 inches (WxH)
Available Colors	White, Vanilla, Black, Bronze, Clear Anodized
Compatible Controls	Chain, Cordless, Cordless Plus, Motorization
Roll Styles	Standard or Reverse
Fabric Wrap	Available for Enhanced Customization

PREMIUM PERFORMANCE

- Larger profile accommodates bigger shade systems
- Fabric insert strip conceals mechanism
- Enhanced mechanism protection
- Superior light seal at top of shade
- Elegant proportions for high-end installations

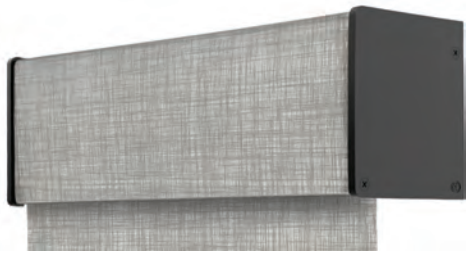

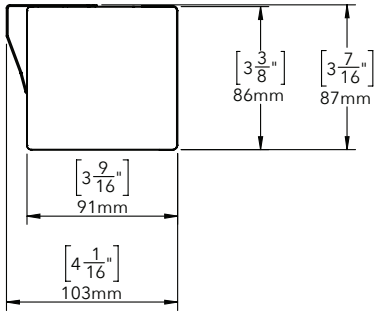

Squared Cassette

Contemporary Elegance

The Squared Cassette delivers modern sophistication with clean geometric lines:

SPECIFICATIONS

Dimensions	3.625 x 3.5 inches (WxH)
Available Colors	White, Vanilla, Black, Bronze, Clear Anodized
Compatible Controls	Chain, Cordless, Motorization
Roll Styles	Standard or Reverse
Fabric Wrap	Available for Enhanced Customization

MODERN SOPHISTICATION

- Crisp, squared profile complements contemporary design
- Fabric wrap creates cohesive aesthetic
- Precision corners and seamless construction
- Ideal for modern luxury interiors

True Square Cassette

Architectural Precision

The True Square Cassette offers sharp, architectural lines for contemporary luxury spaces:

SPECIFICATIONS

Dimensions	3.625 x 3.5 inches (WxH)
Available Colors	White, Vanilla, Black, Bronze, Clear Anodized
Compatible Controls	Chain, Cordless, Motorization
Roll Styles	Standard or Reverse
Fabric Wrap	Available for Enhanced Customization

ARCHITECTURAL EXCELLENCE

- Pure geometric form
- Perfect corners and edges
- Minimal visual profile
- Complements high-end modern architecture

Fascia Systems

Sophisticated Concealment

Fascia systems provide cornice-style concealment with refined elegance, ideal for both residential and commercial luxury applications.

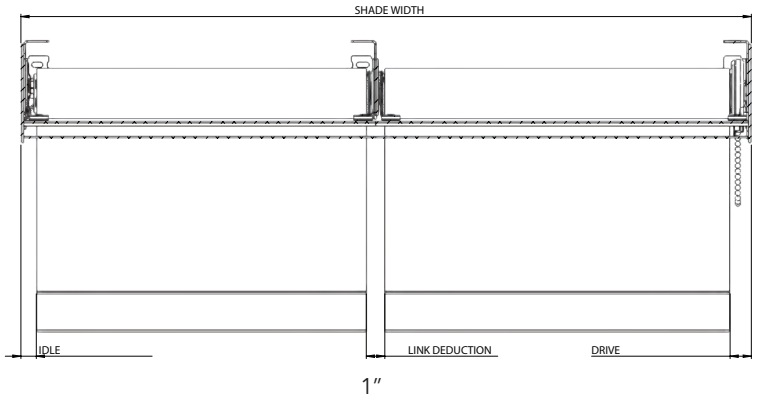

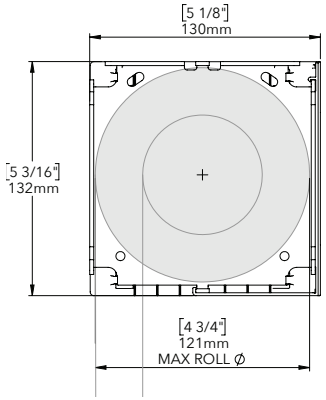

4” Fascia

Classic Cornice Profile

The 4” Fascia delivers traditional elegance with modern functionality:

SPECIFICATIONS

Dimensions	4 x 4 inches (WxH)
Available Colors	White, Vanilla, Black, Bronze, Clear Anodized
Compatible Controls	Chain, Motorization
Roll Styles	Standard
Fabric Wrap	No

TRADITIONAL SOPHISTICATION

- Conceals roller shade hardware system
- Classic cornice profile
- Comprehensive mechanism concealment
- Coordinates with architectural trim
- Refined presence in luxury interiors

5” Fascia

Expanded Capacity

The 5” Fascia offers enhanced coverage and dual-shade capability:

SPECIFICATIONS

Dimensions	5 x 5 inches (WxH)
Available Colors	White, Bronze, Black, Clear Anodized
Compatible Controls	Chain, Motorization
Roll Styles	Standard
Fabric Wrap	No

VERSATILE EXCELLENCE

- Accommodates larger shade systems
- Large dimension can house two shades
- Dual-shade capability for layered light control
- Superior mechanism protection
- Ideal for expansive installations

Important Consideration: Using a quiet motor within a metal cassette or fascia will result in sound resonance. For ultra-quiet operation, consider alternative hardware configurations.

Classic Valance

Timeless Elegance

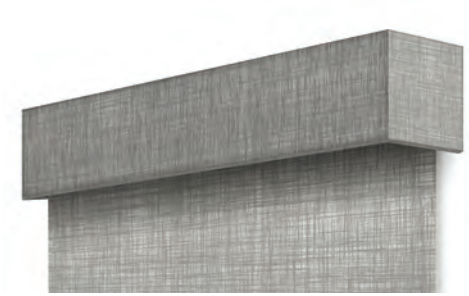

5“ Classic Valance

Sophisticated Fabric-Wrapped Beauty

The Classic Valance offers traditional refinement with customizable fabric wrapping:

SPECIFICATIONS

Standard Height	5 inches
Header Depths	1.5, 2.5, 3.5 inches
Compatible Controls	Chain, Cordless, Cordless-Plus, Motorization
Roll Styles	Standard or Reverse
Fabric Wrap	Available with any material color option from collection

CUSTOMIZABLE LUXURY

- Fabric wrap coordinates perfectly with shade
- Multiple depth options for varied applications
- Traditional profile with modern functionality
- Seamless aesthetic integration

CLASSIC VALANCE OUTSIDE MOUNT SHADE WITH OUTSIDE MOUNT VALANCE

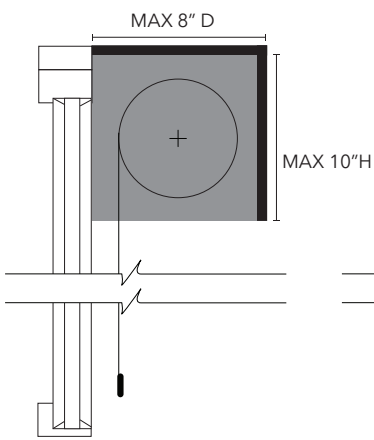

CLASSIC VALANCE INSIDE MOUNT SHADE WITH OUTSIDE MOUNT VALANCE

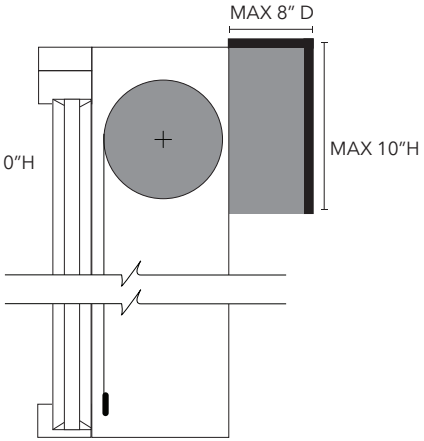

Hardware

Color Options

Premium Finish Selection

Nice Sun Shades hardware is available in five sophisticated finishes to complement any design palette:

AVAILABLE COLORS

White	Classic, Versatile, Timeless
Vanilla	Warm, Subtle Elegance
Black	Bold, Contemporary Sophistication
Bronze	Rich, Traditional Warmth
Clear Anodized	Modern, Architectural Refinement

Each finish is precisely applied for durability and lasting beauty, maintaining luxury appearance throughout the shade's lifetime.

Clutch Covers

Finishing Details

Refined Concealment for Manual Systems

Clutch covers provide elegant finishing for outside mount manual shades:

FEATURES

- Easy attachment to any outside mount shade without valance
- Available colors: White, Cream, Black, Gray, Brown
- No additional charge
- Coordinates with hardware finish

PROFESSIONAL APPEARANCE

- Conceals clutch mechanism
- Clean, finished aesthetic
- Simple installation
- Enhanced luxury presentation

Hardware Selection Guidance

Choosing the Right Hardware

For Contemporary Spaces

- Squared Cassette or True-Squared Cassette
- Clear Anodized or Black finish
- Clean lines complement modern architecture

For Traditional Interiors

- Classic Valance with fabric wrap
- 4" Fascia for cornice effect
- Bronze or Vanilla finish

For Transitional Design

- Medium or Large Cassette with fabric insert
- White or Vanilla finish
- Versatile aesthetic bridges styles

For Commercial Luxury

- 5" Fascia for expansive coverage
- Black or Clear Anodized finish
- Professional, refined appearance

While Nice Sun Shades' proprietary motor technology represents the pinnacle of luxury shade operation, our manual systems deliver the same commitment to engineering excellence, safety, and sophisticated design that define our brand.

Manual Control Systems

PRECISION ENGINEERING FOR EFFORTLESS OPERATION

While Nice Sun Shades is renowned for proprietary motor technology, our manual control systems exemplify the same commitment to engineering excellence and luxurious operation. Each manual system delivers smooth, reliable performance with sophisticated design details.

Skyline Manually Operated System

Patented Clutch Technology Excellence

The Skyline system features advanced clutch technology refined through continuous innovation, delivering dependable operation in an elegant, refined profile:Railroaded Orientation (Material Turned)

Premium Engineering Features

Advanced Clutch Technology

- Patented improvement on proven clutch design
- Smooth, consistent operation throughout shade life
- Rounded profile for contemporary aesthetics
- Precision-engineered for reliability

Spring-Loaded Pin-End Technology

- Highly forgiving installation flexibility
- Accommodates slight measurement variations
- Reduces installation time and complexity
- Professional, clean installation results

Refined Aesthetic Details

- Sleek, rounded end caps
- No-notch fascia design for seamless appearance
- Fiberglass-filled nylon construction
- Durable, long-lasting performance

Versatile Applications

- Ideal for both residential luxury and commercial installations
- Appropriate for all shade sizes and fabrics
- Complements any interior design style

Operating Characteristics

Continuous Chain Operation

- Cord loop length remains constant during operation
- Predictable, intuitive operation
- Smooth raising and lowering
- Minimal effort required

Child Safety Integration

- Cord tension device included with every shade
- Complies with WCMA/ANSI safety standards
- Cord cleats provided to secure cords out of reach
- Safety integrated into design, not added as afterthought

Dependable Performance

- Consistent operation across temperature ranges
- Minimal maintenance requirements
- Long service life
- Professional-grade reliability

HARDWARE SPECIFICATIONS

Size Options	**Standard:** 2.1875 x 2.3125 inches (DxH)
	Large: 2.1875 x 2.675 inches (DxH)
Availalbe Colors	**White:** Classic, Versatile
	Black: Contemporary, bold
Roll Styles	**Standard:** Fabric rolls off back of roller
	Reverse: Fabric rolls off front of roller

Chain Options

Elegant Details

Metal Chain

Premium Metal Chain Finishes

Stainless Steel (Standard - No Additional Charge)

- Contemporary, refined appearance
- Corrosion-resistant durability
- Complements most hardware finishes
- Professional, clean aesthetic

Medieval Brass

- Rich, traditional warmth
- Classic elegance
- Coordinates with bronze hardware
- Luxurious appearance

Antique Brown on Brass

- Aged, sophisticated patina
- Traditional charm
- Unique character
- Distinguished appearance

Dungeon Gray

- Modern, industrial aesthetic
- Contemporary sophistication
- Coordinates with black hardware
- Bold design statement

Continuous Chain

Standard Operation

- Consistent loop configuration
- Even weight distribution
- Smooth operation
- Tension device for child safety included

Manual System

Selection Guide

Choosing the Right Manual System

For Maximum Safety

- Cordless or Cordless-Plus operation
- Eliminates all cord hazards
- Ideal for homes with children or pets

For Traditional Aesthetics

- Skyline with metal chain
- Medieval Brass or Antique Brown finishes
- Classic Valance hardware

For Contemporary Spaces

- Cordless operation
- Stainless Steel or Dungeon Gray chain
- Squared or True-Squared Cassette hardware

For Ease of Operation

- Cordless-Plus for larger shades
- Standard Cordless for typical applications
- Skyline with continuous chain for precise control

Cordless Systems

Safety Meets Sophistication

Cordless Operation

The Ultimate in Safe, Elegant Operation

Cordless operation eliminates all hanging cords, providing the safest possible manual shade operation:

Operating Excellence

- Shade lowers manually with gentle downward pull
- Automatic slow raise with slight pull on bottom hem
- Smooth, controlled movement throughout travel
- Intuitive operation requires no training

Safety Leadership

- Eliminates all strangulation hazards
- Complies with WCMA/ANSI safety standards
- Safe for children and pets
- Peace of mind for families

Aesthetic Purity

- No visible operating cords
- Clean, minimalist appearance
- Unobstructed window views
- Contemporary sophistication

TECHNICAL SPECIFICATIONS

Minimum Width	18 inches
Minimum Width With Cassette	19 inches
Maximum Width	108 inches
Maximum Height	120 inches
Compatible With	Medium Cassette, Large Cassette, Square Cassette, Classic Valance

Cordless-Plus Operation

Enhanced Effortless Positioning

Cordless-Plus technology provides even more refined operation with enhanced positioning ease:

Advanced Features

- Effortless positioning requires no tugging
- Simply raise and lower to any desired position
- Enhanced spring mechanism provides smooth operation
- Precise positioning throughout entire height range

Premium Performance

- Easier operation than standard cordless
- Ideal for larger or heavier shades
- Smooth, controlled movement
- Professional-grade mechanism

Safety Compliant

- Complies with WCMA/ANSI safety standards
- No cords for maximum safety
- Safe for all family members
- Peace of mind operation

SPECIFICATIONS

Compatible With	Medium Cassette, Large Cassette, Classic Valance
Roll Styles	Standard or Reverse

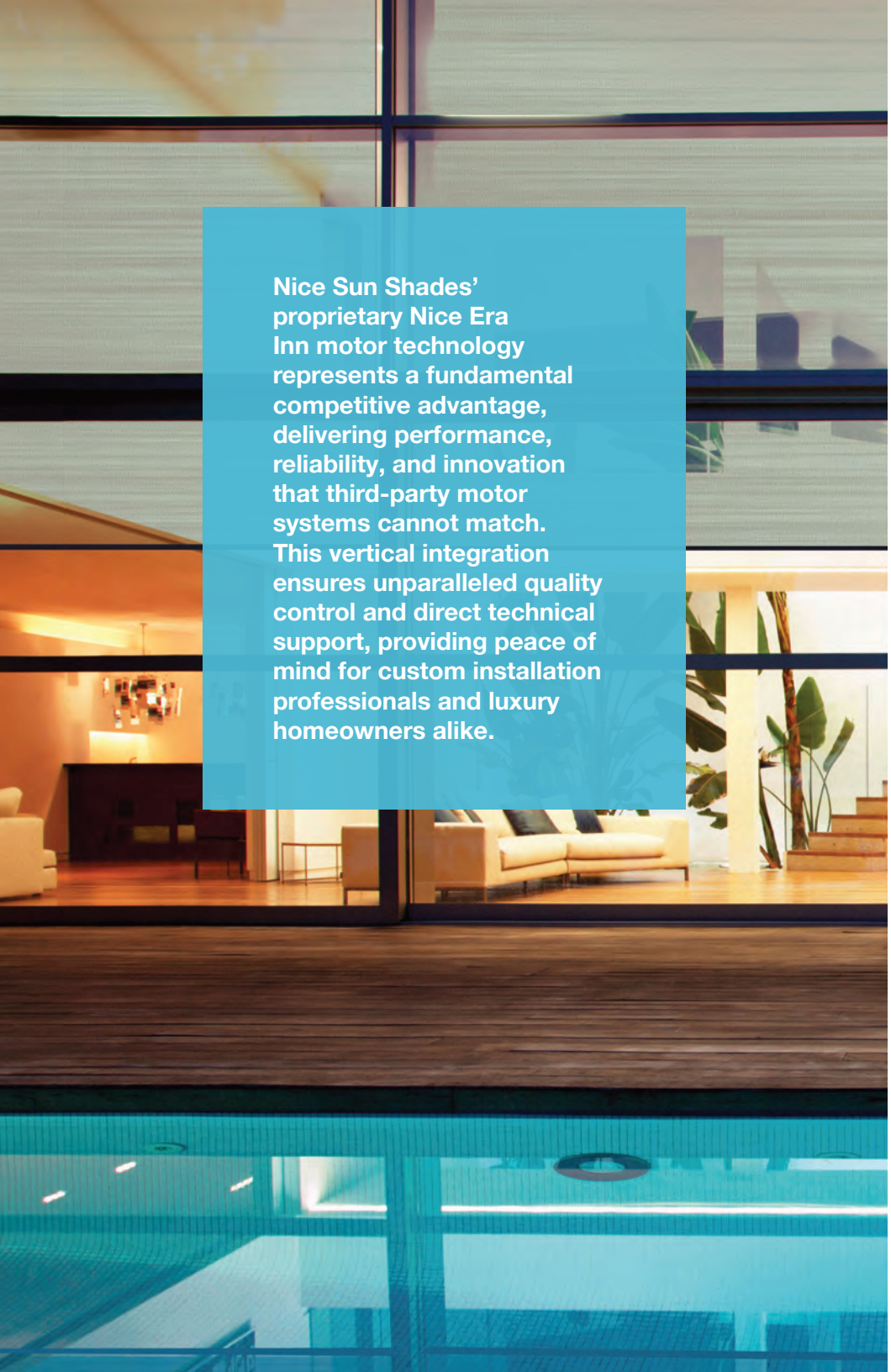

Nice Sun Shades' proprietary Nice Era Inn motor technology represents a fundamental competitive advantage, delivering performance, reliability, and innovation that third-party motor systems cannot match. This vertical integration ensures unparalleled quality control and direct technical support, providing peace of mind for custom installation professionals and luxury homeowners alike.

Motorization

PROPRIETARY Nice ERA INN MOTOR TECHNOLOGY

The Heart of Superior Performance

At the core of Nice Sun Shades' competitive advantage lies our proprietary Nice Era Inn motor technology. Unlike competitors who source motors from third-party manufacturers, Nice Sun Shades designs, engineers, and manufactures motors in-house to exacting specifications. This vertical integration ensures performance, reliability, and innovation that third-party motor systems simply cannot match.

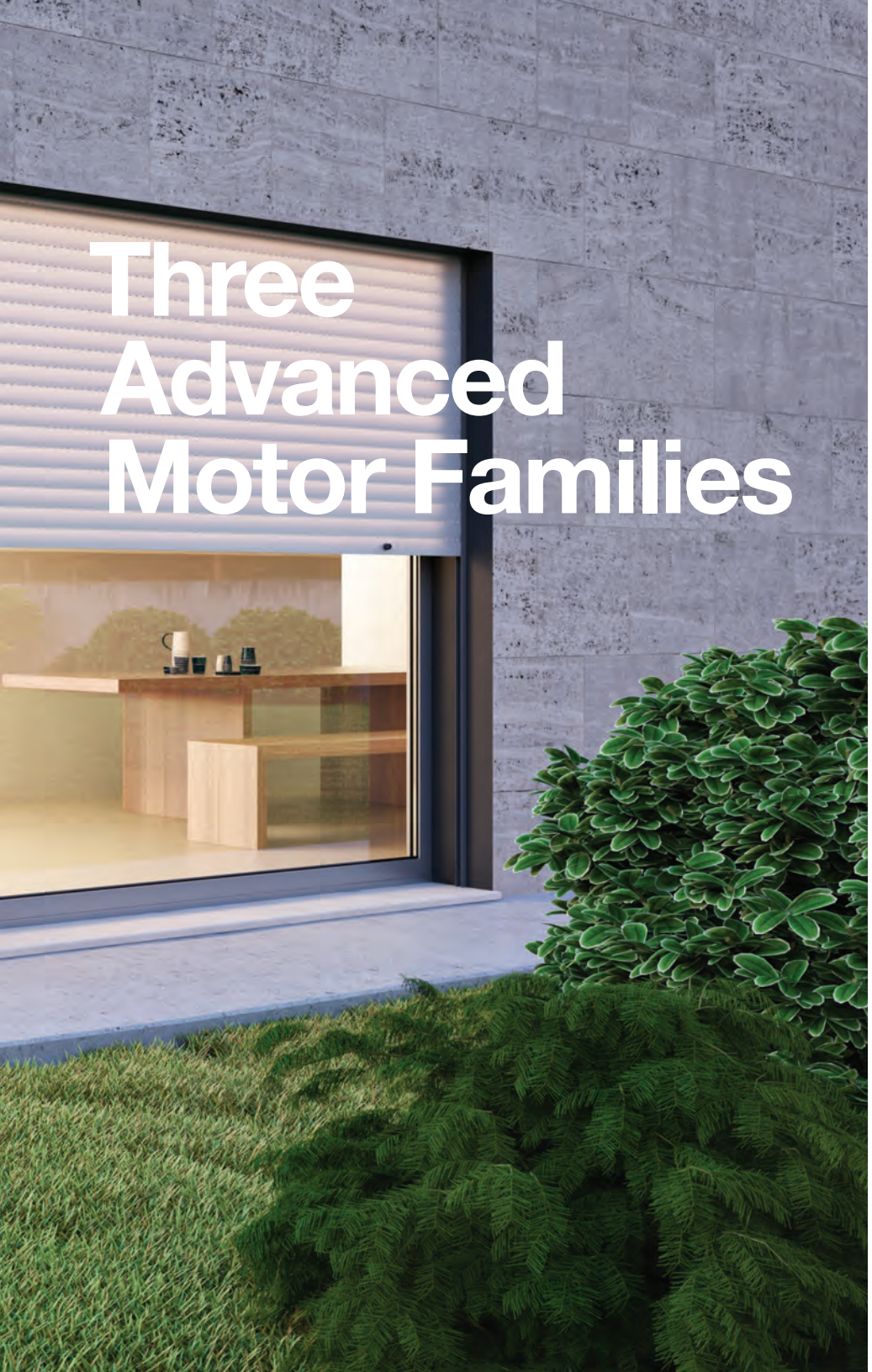

Era Inn Edge

Premium Performance

The Standard for Luxury Motorization

ERA INN EDGE motors deliver advanced features and ultra-quiet operation for discerning luxury applications:

Power Options

- **AC (100-240V):** Universal voltage for worldwide compatibility
- **DC (24V):** Low-voltage safety and flexibility

Built-In Radio Receiver

- Eliminates external control modules
- Streamlined installation
- Reliable wireless operation
- Compatible with Nice transmitter systems

Advanced Features

- Adjustable speed for customized operation
- Deceleration modulation for smooth stops
- Programmable intermediate heights
- Adjustable duration of movement
- Soft start and soft stop for whisper-quiet operation

Ultra-Quiet Operation

- Less than 35 dBA sound level
- Whisper-silent luxury performance
- Preserves serenity in bedrooms and living spaces
- Virtually imperceptible operation

Available Sizes

- S (35mm) for standard applications
- M (45mm) for larger shades and increased torque

Era Inn Smart

Advanced System Integration

The Ultimate in Sophisticated Automation

ERA INN SMART motors provide advanced system integration capabilities for sophisticated home automation and commercial building management:

Power Options

- **AC (100-240V):** Universal voltage compatibility
- **DC (24V):** Low-voltage flexibility

All EDGE Features Plus

- Bus T4 input for advanced control
- Nice Screen Configuration Tool compatibility
- Browser-based programming (PC or tablet)
- Detailed system feedback and diagnostics

Advanced Integration

- DMBM module connectivity
- Field bus for sophisticated control
- Advanced motor parameter settings
- Real-time system monitoring

Professional Applications

- Commercial building automation
- Sophisticated residential systems
- Integration with building management systems
- Advanced scene programming

Available Sizes

- S (35mm) for standard applications
- M (45mm) for larger shades and commercial installations

Era Inn Edge S Li-Ion

Battery Powered Freedom

Revolutionary Wireless Convenience

ERA INN EDGE S Li-ion motors feature integrated lithium-ion battery technology, eliminating wired connections entirely:

Wireless Excellence

- No electrical wiring required
- Perfect for retrofit applications
- Installation flexibility unlimited by electrical constraints
- Clean, wireless aesthetic

Rechargeable Technology

- Integrated lithium-ion battery
- Extended operational life between charges
- Convenient charging process
- Environmentally responsible

Perfect Performance

- Perfect hembar alignment every time
- Consistent operation throughout battery life
- All EDGE features in wireless format
- Ultra-quiet operation less than 35 dBA

Retrofit Perfection

- Ideal for existing homes without shade wiring
- No wall damage for new electrical runs
- Quick installation without electrical work
- Historic preservation applications

Era Inn Edge S AC

Premium Residential Performance

Tubular motor with electronic limit switch.

Ø 35 mm

TECHNICAL SPECIFICATIONS

ELECTRICAL SPECIFICATIONS		
Power supply	100–240 V AC / 50-60 Hz	
Power consumption in standby	<0.5 W (energy efficient)	
PERFORMANCE		
Torque Options	3 Nm for smaller applications	6 Nm for medium applications
Rated Speed	32 rpm (3Nm)	20 rpm (6 Nm)
Maximum Speed	48 rpm (3Nm)	32 rpm (6Nm)
Minimum Speed	16 rpm (3Nm)	10 rpm (6 Nm)
Noise Level	35 dBA (ultra quiet)	
Continuous Operating Time	6-10 minutes	
DIMENSIONS		
Length (L)	744 mm	
Tube Diameter	35 mm	

Protection class IP44.
*Value calculated with 40 mm diameter octagonal roller.

Era Inn Edge S DC

Low Voltage Flexibility

Tubular motor with electronic limit switch, dry contact and BusT4 inputs on the motor head.

Ø 35 mm

TECHNICAL SPECIFICATIONS

ELECTRICAL SPECIFICATIONS		
Power supply	24 V DC	
Cable Length	1.5m (2-wire)	
PERFORMANCE		
Torque Options	3 Nm for smaller applications	6 Nm for medium applications
Rated Speed	32 rpm (3Nm)	20 rpm (6 Nm)
Maximum Speed	48 rpm (3Nm)	32 rpm (6Nm)
Minimum Speed	16 rpm (3Nm)	10 rpm (6 Nm)
Noise Level	35 dBA (ultra quiet)	
Continuous Operating Time	6-10 minutes	
DIMENSIONS		
Length (L)	472 mm	
Tube Diameter	35 mm	

Protection class IP44.
*Value calculated with 40 mm diameter octagonal roller.

Era Inn Edge M AC

Enhanced Capacity

Larger 45mm tube diameter for increased torque capacity and larger shade applications.

Pushbuttons for precise limit switch adjustment

Ø 45 mm

TECHNICAL SPECIFICATIONS

ELECTRICAL SPECIFICATIONS		
Power supply	100–240 V AC / 50-60 Hz	
Power consumption in standby	<0.5 W (energy efficient)	
PERFORMANCE		
Torque Options	3 Nm for smaller applications	6 Nm for medium applications
Rated Speed	32 rpm (3Nm)	20 rpm (6 Nm)
Maximum Speed	48 rpm (3Nm)	32 rpm (6Nm)
Minimum Speed	16 rpm (3Nm)	10 rpm (6 Nm)
Noise Level	35 dBA (ultra quiet)	
Continuous Operating Time	6-10 minutes	
DIMENSIONS		
Length (L)	744 mm	
Tube Diameter	45 mm	

Protection class IP44.
*Value calculated with 40 mm diameter octagonal roller.

Era Inn Edge M DC

Low Voltage Enhanced Capacity

Larger 45mm tube diameter for larger applications requiring low voltage power.

Pushbuttons for precise limit switch adjustment

Ø 45 mm

TECHNICAL SPECIFICATIONS

ELECTRICAL SPECIFICATIONS		
Power supply	24 V DC	
Cable Length	1.5m (2-wire)	
PERFORMANCE		
Torque Options	3 Nm for smaller applications	6 Nm for medium applications
Rated Speed	32 rpm (3Nm)	20 rpm (6 Nm)
Maximum Speed	48 rpm (3Nm)	32 rpm (6Nm)
Minimum Speed	16 rpm (3Nm)	10 rpm (6 Nm)
Noise Level	35 dBA (ultra quiet)	
Continuous Operating Time	6-10 minutes	
DIMENSIONS		
Length (L)	472 mm	
Tube Diameter	45 mm	

Protection class IP44.
*Value calculated with 40 mm diameter octagonal roller.

Era Inn Smart S AC

Advanced System Integration

Tubular motor with electronic limit switch.

Ø 35 mm

TECHNICAL SPECIFICATIONS

ELECTRICAL SPECIFICATIONS		
Power supply	100–240 V AC / 50-60 Hz	
Power consumption in standby	<0.5 W (energy efficient)	
PERFORMANCE		
Torque Options	3 Nm for smaller applications	6 Nm for medium applications
Rated Speed	32 rpm (3Nm)	20 rpm (6 Nm)
Maximum Speed	48 rpm (3Nm)	32 rpm (6Nm)
Minimum Speed	16 rpm (3Nm)	10 rpm (6 Nm)
Noise Level	35 dBA (ultra quiet)	
Continuous Operating Time	6-10 minutes	
DIMENSIONS		
Length (L)	744 mm	
Tube Diameter	35 mm	

Protection class IP44.
*Value calculated with 40 mm diameter octagonal roller.

Era Inn Smart S DC

Low Voltage Advanced Integration

Tubular motor with electronic limit switch, dry contact and BusT4 inputs on the motor head.

Ø 35 mm

TECHNICAL SPECIFICATIONS

ELECTRICAL SPECIFICATIONS		
Power supply	24 V DC	
Cable Length	1.5m (2-wire)	
PERFORMANCE		
Torque Options	3 Nm for smaller applications	6 Nm for medium applications
Rated Speed	32 rpm (3Nm)	20 rpm (6 Nm)
Maximum Speed	48 rpm (3Nm)	32 rpm (6Nm)
Minimum Speed	16 rpm (3Nm)	10 rpm (6 Nm)
Noise Level	35 dBA (ultra quiet)	
Continuous Operating Time	6-10 minutes	
DIMENSIONS		
Length (L)	472 mm	
Tube Diameter	35 mm	

Protection class IP44.
*Value calculated with 40 mm diameter octagonal roller.

Era Inn Smart M AC

Commercial Grade Advanced Integration

Larger 45mm tube diameter for increased torque capacity and larger shade applications.

Pushbuttons for precise limit switch adjustment

Ø 45 mm

TECHNICAL SPECIFICATIONS

ELECTRICAL SPECIFICATIONS		
Power supply	100–240 V AC / 50-60 Hz	
Power consumption in standby	<0.5 W (energy efficient)	
PERFORMANCE		
Torque Options	3 Nm for smaller applications	6 Nm for medium applications
Rated Speed	32 rpm (3Nm)	20 rpm (6 Nm)
Maximum Speed	48 rpm (3Nm)	32 rpm (6Nm)
Minimum Speed	16 rpm (3Nm)	10 rpm (6 Nm)
Noise Level	35 dBA (ultra quiet)	
Continuous Operating Time	6-10 minutes	
DIMENSIONS		
Length (L)	744 mm	
Tube Diameter	45 mm	

Protection class IP44.
*Value calculated with 40 mm diameter octagonal roller.

Era Inn Smart M DC

Low Voltage Commercial Integration

Larger 45mm tube diameter for larger applications requiring low voltage power.

Pushbuttons for precise limit switch adjustment

Ø 45 mm

TECHNICAL SPECIFICATIONS

ELECTRICAL SPECIFICATIONS		
Power supply	24 V DC	
Cable Length	1.5m (2-wire)	
PERFORMANCE		
Torque Options	3 Nm for smaller applications	6 Nm for medium applications
Rated Speed	32 rpm (3Nm)	20 rpm (6 Nm)
Maximum Speed	48 rpm (3Nm)	32 rpm (6Nm)
Minimum Speed	16 rpm (3Nm)	10 rpm (6 Nm)
Noise Level	35 dBA (ultra quiet)	
Continuous Operating Time	6-10 minutes	
DIMENSIONS		
Length (L)	472 mm	
Tube Diameter	45 mm	

Protection class IP44.
*Value calculated with 40 mm diameter octagonal roller.

Motor Features In Depth

Electronic Limit Switch

Precision Positioning Excellence

Electronic limit switches eliminate mechanical components for superior reliability:

Advantages

- Precise electronic positioning
- No mechanical wear
- Consistent performance over lifetime
- Programmable via transmitter or motor head pushbuttons
- Easily adjustable in field

Programming

- Simple programming process
- Fine adjustments available
- Multiple positions stored in memory
- No drift or degradation over time

Soft Start / Soft Stop

Whisper-Quiet Luxury Operation

Controlled acceleration and deceleration deliver refined performance:

Benefits

- Smooth, quiet operation preserves serenity
- Reduces stress on shade components
- Extends system lifetime
- Enhances luxury experience
- Eliminates jarring starts and stops

Obstacle Detection

Intelligent Safety System

Advanced obstacle detection protects users and equipment:

Safety Features

- Motor detects obstacles when raising or lowering
- Immediately stops upon detection
- Automatically reverses to prevent damage
- Prevents injury to people or pets

Configurable Settings

- Disabled (for special applications)
- Enabled only when raising
- Enabled when raising and lowering
- Customizable sensitivity

Limit Switch Adjustment Pushbuttons

Field-Adjustable Precision

Pushbuttons on motor head enable fine positioning adjustments:

Functionality

- Each press rotates roller approximately 2°
- Fine-tune top and bottom positions
- Adjust in field without programming tools
- Simple, intuitive operation

Adjustable Speed (EDGE and SMART)

Customized Performance

Adjustable speed allows customization to application requirements:

Advantages

- Match speed to shade size
- Optimize for fabric weight
- Customize to user preference
- Balance speed and quietness

Intermediate Heights (EDGE and SMART)

Beyond Simple Up and Down

Program multiple stopping positions for sophisticated control:

Applications

- Morning light filtering position
- Afternoon glare reduction position
- Evening privacy position
- Custom positions for any application

Adjustable Duration of Movement
(EDGE and SMART)

Time-Based Control

Set maximum time for shade travel to prevent over-travel:

Benefits

- Ensures consistent operation
- Prevents damage from over-travel
- Customizable to installation
- Professional-grade control

Bus T4 Technology
(SMART only)

Advanced System Integration

Field bus connectivity enables sophisticated building automation:

Capabilities

- Connect to DMBM module on modular control unit
- Advanced motor parameter settings
- Detailed system feedback and diagnostics
- Integration with building management systems
- Real-time monitoring and control

TTBus Technology
(EDGE and SMART)

Simplified Advanced Control

TTBus technology streamlines sophisticated installations:

Advantages

- Control motor movement through low-voltage control
- Connect climate sensors without external control units
- Parallel connection of multiple motors from single control point
- Reduced wiring complexity
- Enhanced system integration

Motor Warranty

Industry Leading Coverage

Nice Sun Shades' motor warranty reflects our confidence in manufacturing quality:

Wired Motors (AC and DC)

- 7-year warranty on materials and workmanship
- Coverage from date stamped on motor label
- Repair or replacement at manufacturer's option
- Free of charge through authorized suppliers

Battery Powered Motors

- 5-year warranty on materials and workmanship
- Excludes batteries (consumable items)
- Professional-grade coverage

Warranty Requirements

- Proper installation per Nice specifications
- Operation under normal use conditions
- No unauthorized modifications

Motor Selection Guide

Choosing the Right Motor Series

Era Inn Edge Series

Best For

- Premium residential applications
- Clients demanding ultra-quiet operation
- Smart home integration requirements
- Advanced features (adjustable speed, intermediate heights)
- Standard luxury installations

Key Advantages

- Built-in radio receiver
- Ultra-quiet operation (less than 35 dBA)
- Advanced programming features
- Ideal balance of features and cost

Era Inn Smart Series

Best For

- Advanced system integration requirements
- Commercial building automation
- Sophisticated home automation systems
- Applications requiring Bus T4 connectivity
- Projects with building management system integration

Key Advantages

- Browser-based configuration
- Advanced system integration
- Detailed feedback and diagnostics
- Commercial-grade capabilities

Era Inn Edge S Li-ion

Best For

- Retrofit applications without existing shade wiring
- Historic homes where wiring is impractical
- Rental properties requiring reversible installation
- Applications where wiring costs exceed battery benefits
- Clean, wireless aesthetic requirements

Key Advantages

- No electrical wiring required
- Perfect hembar alignment
- All EDGE features in wireless format
- Installation flexibility

Choosing Motor Torque

3 Nm Motors

Applications

- Small shades (typically under 36” wide)
- Lightweight fabrics (sheers, light-filtering)
- Applications where speed is priority
- Compact installations

Characteristics

- Faster operation
- Quieter at high speeds
- Ideal for smaller windows

6 Nm Motors

Applications

- Medium shades (36” to 72” wide)
- Standard fabric weights
- Most residential applications
- Balanced performance requirements

Characteristics

- Versatile performance
- Most common specification
- Excellent balance of speed and power

10 Nm Motors (SMART only)

Applications

- Large shades (over 72” wide)
- Heavy blackout fabrics
- Commercial installations
- Maximum load requirements

Characteristics

- Maximum lifting capacity
- Slower operation
- Commercial-grade performance

While Nice Sun Shades' proprietary motor technology represents the pinnacle of luxury shade operation, our manual systems deliver the same commitment to engineering excellence, safety, and sophisticated design that define our brand.

Control Options

SOPHISTICATED CONTROL FOR LUXURY LIVING

Nice Sun Shades offers comprehensive control options that integrate seamlessly with our proprietary motor technology, delivering intuitive operation and sophisticated automation capabilities. From simple handheld transmitters to advanced smart home integration, every control solution reflects our commitment to elegance and ease of use.

Radio Transmitters

Handheld Luxury Control

ERA P Series

Portable Excellence

ERA P Series portable transmitters deliver sophisticated control in an elegant, user-friendly format:

Key Features

- Manage up to 6 automation groups
- Battery powered for complete portability
- Simple, intuitive programming
- Elegant design complements luxury interiors
- Reliable wireless operation

Ideal Applications

- Residential luxury installations
- Multi-room control requirements
- Guest rooms and secondary spaces
- Simple, elegant operation

User Experience

- Intuitive button layout
- Visual feedback
- Comfortable ergonomics

Advanced Control Systems

Modular System Architecture

Flexible, Scalable Control

Nice's modular control system provides professional-grade flexibility for sophisticated installations:

System Components

- Interface modules for various input types
- Connection modules for system integration
- Power supply modules for distributed power
- DIN rail mounting for clean installation

Professional Advantages

- Scalable from simple to complex
- Standardized installation approach
- Easy expansion and modification
- Professional, organized appearance

Nice Screen Configuration Tool

Browser-Based Professional Programming

ERA INN SMART motors are configurable via Nice Screen Configuration Tool, providing advanced programming capabilities:

Features

- Browser-based interface (PC or tablet)
- Connect via LAN cable or Wi-Fi
- Comprehensive parameter settings
- Real-time system feedback

Professional Capabilities

- Advanced parameter adjustment
- Multiple motor programming
- System diagnostics and monitoring
- Detailed feedback and reporting

Programming Functions

- Motor speed adjustment
- Intermediate height programming
- Obstacle detection configuration
- Duration of movement settings
- Advanced automation scenarios

Programming Devices

Professional Programming Tool

Ttpro Palmtop Programmer

TTPRO programmer provides comprehensive field programming capabilities:

Functions

- Adjust limit switch positions with precision
- Set intermediate heights for multiple positions
- Configure movement speed and duration
- Adjust soft start, soft stop parameters
- Configure obstacle detection sensitivity
- Address each motor individually in multi-motor installations
- Memorize and cancel transmitters and sensors
- Copy settings to new motors for consistency

Professional Advantages

- Complete control over all motor parameters
- Field programming without computer
- Efficient multi-motor configuration
- Diagnostic capabilities

Control System Selection Guide

Choosing the Right Control Solution

For Simple Single-Shade Control

- ERA P Series portable transmitter
- Wall-mounted switch for fixed location
- Basic, reliable operation

For Multi-Room Control

- ERA P Series for portable control
- For Smart Home Integration:
- Automated scenes and scheduling
- Integration with home systems

For Commercial Building Automation

- ERA INN SMART motors with DMBM modules
- Nice Screen Configuration Tool programming
- Building management system integration
- Advanced monitoring and control

For Ultimate Luxury Experience

- Combination of all control methods
- Voice control for convenience
- App control for remote access
- Wall-mounted switches at key locations
- Sophisticated scene programming

Scene Programming

Lifestyle-based Automation

Scene programming enables single-command control of multiple shades:

Morning Wake Scene

- Bedroom shades rise gradually
- Bathroom shades rise to 50%
- Kitchen shades open fully
- Timed to sunrise or alarm

Daytime Comfort Scene

- Living room shades adjust for glare control
- Home office shades optimize screen visibility
- Kitchen shades maintain pleasant illumination

Entertainment Scene

- Media room shades lower completely
- Adjacent room shades adjust for reduced glare
- Lighting dims automatically

Evening Privacy Scene

- All shades lower as sunset approaches
- Bathroom shades lower completely
- Bedroom shades set to preferred position

Away Mode

- Random shade movement simulates presence
- Security integration
- Energy-saving positioning

Sensor Integration

Intelligent Environmental Response

Nice Sun Shades integrates with environmental sensors for automated responses:

Sun Sensors

- Automatic shade adjustment based on sun position
- Prevents furniture and artwork fading
- Maintains comfortable interior temperature
- Reduces cooling loads

Temperature Sensors

- Shade adjustment based on interior temperature
- Integration with climate control systems
- Energy efficiency optimization

Wind Sensors Automatic retraction of exterior shades

- Protection from damage
- Weather-responsive operation

Proper specification using these technical details ensures flawless installation and optimal performance of Nice Sun Shades systems. For applications outside these standard specifications, contact our technical support team for custom solutions.

Technical Specifications

PRECISION SPECIFICATIONS FOR PROFESSIONAL INSTALLATION

Nice Sun Shades provides comprehensive technical specifications to ensure proper specification and flawless installation. This section details size limitations, deductions, and system-specific requirements for professional custom installation.

Standard Roller Shade

Specifications

Skyline Manual System (1 1/4” - 2” Tube)

SKYLINE SYSTEM	
STANDARD ORIENTATION	
Minimum Width	8”
Maximum Width	144”
RAILROADED (MATERIAL TURNED)	
Minimum Width	8”
Maximum Width	See fabric collection chart
Maximum Height	180”

FACTORY DEDUCTIONS	
INSIDE MOUNT (IB)	
Fabric Width	Ordered Width Minus 1 1/8”
Bracket to Bracket Width	Ordered Width Minus 1/8”
OUTSIDE MOUNT (OB)	
Fabric Width	Ordered Width Minus 1 1/8”
Bracket to Bracket Width	Ordered Width
MOTORIZED SYSTEMS	
110V Motorized	Ordered Width Minus 1 1/8”

Important Note: Nice Sun Shades takes 1/8” deduction for inside mount shades to account for measurement inaccuracies or window inconsistencies, ensuring proper fit.

Galaxy System Specifications (2 1/2” Tube)

FACTORY DEDUCTIONS	
INSIDE MOUNT (IB)	
Fabric Width	Ordered Width Minus 1 3/8”
Bracket to Bracket Width	Ordered Width Minus 1/8”
OUTSIDE MOUNT (OB)	
Fabric Width	Ordered Width Minus 1 3/8”
Bracket to Bracket Width	Ordered Width
MOTORIZED SYSTEMS	
110V Motorized	Ordered Width Minus 2”

Cordless Manual Specifications

STANDARD SIZES	
DIMENSIONAL LIMITATIONS	
Minimum Width	18”
Minimum Width with Cassette	19”
Maximum Width	108”
Maximum Height	120”

FACTORY DEDUCTIONS (1 1/4” - 2” TUBE)	
INSIDE MOUNT (IB)	
Fabric Width	Ordered Width Minus 1”
OUTSIDE MOUNT (OB)	
Fabric Width	Ordered Width Minus 7/8”
STANDARD	
Fabric Width	Ordered Width

4” Fascia Specifications

STANDARD ORIENTATION

SIZE RANGES	
Minimum Width	8”
Minimum Width	144”
Maximum Height	108”

RAILROADED (MATERIAL TURNED)

SIZE RANGES	
Minimum Width	8”
Minimum Width	144”
Maximum Height	Fabric Width Minus 18”

FACTORY DEDUCTIONS - 1 1/4” - 2” TUBE

INSIDE MOUNT (IB)	
Fabric Width	Ordered Width Minus 1 1/8”
Bracket to Bracket Width	Ordered Width Minus 1/8”
OUTSIDE MOUNT (OB)	
Fabric Width	Ordered Width Minus 1 1/8”
Bracket to Bracket Width	Ordered Width
MOTORIZED SYSTEMS	
110V Motorized	Ordered Width Minus 1 5/8”

FACTORY DEDUCTIONS - 2 1/2” TUBE

INSIDE MOUNT (IB)	
Fabric Width	Ordered Width Minus 1 3/8”
Bracket to Bracket Width	Ordered Width Minus 1/8”
OUTSIDE MOUNT (OB)	
Fabric Width	Ordered Width Minus 1 3/8”
Bracket to Bracket Width	Ordered Width
MOTORIZED SYSTEMS	
110V Motorized	Ordered Width Minus 2 1/4”

5” Fascia Specifications

STANDARD ORIENTATION

SIZE RANGES	
Minimum Width	8”
Minimum Width	168”
Maximum Height	180”

RAILROADED (MATERIAL TURNED)

SIZE RANGES	
Minimum Width	8”
Minimum Width	168”
Maximum Height	Fabric Width Minus 18”

FACTORY DEDUCTIONS - 1 1/4” - 2” TUBE

INSIDE MOUNT (IB)	
Fabric Width	Ordered Width Minus 1 1/8”
Bracket to Bracket Width	Ordered Width Minus 1/8”
OUTSIDE MOUNT (OB)	
Fabric Width	Ordered Width Minus 1 1/8”
Bracket to Bracket Width	Ordered Width
MOTORIZED SYSTEMS	
110V Motorized	Ordered Width Minus 1 9/16”

FACTORY DEDUCTIONS - 2 1/2” TUBE

INSIDE MOUNT (IB)	
Fabric Width	Ordered Width Minus 1 3/8”
Bracket to Bracket Width	Ordered Width Minus 1/8”
OUTSIDE MOUNT (OB)	
Fabric Width	Ordered Width Minus 1 3/8”
Bracket to Bracket Width	Ordered Width
MOTORIZED SYSTEMS	
110V Motorized	Ordered Width Minus 1 11/16”

Cassette Specifications

MEDIUM AND LARGE CASSETTE

STANDARD SIZES	
Minimum Width	8”
Minimum Width	144”
Maximum Height	120”

RAILROADED (MATERIAL TURNED)

SIZE RANGES	
Minimum Width	8”
Minimum Width	144”
Maximum Height	Fabric Width Minus 18”

FACTORY DEDUCTIONS - 1 1/4” - 2” TUBE

INSIDE MOUNT (IB)	
Fabric Width	Ordered Width Minus 1 1/8”
Bracket to Bracket Width	Ordered Width Minus 1/8”
OUTSIDE MOUNT (OB)	
Fabric Width	Ordered Width Minus 1 1/8”
Bracket to Bracket Width	Ordered Width
MOTORIZED SYSTEMS	
110V Motorized	Ordered Width Minus 1 1/4”

FACTORY DEDUCTIONS - 2 1/2” TUBE

INSIDE MOUNT (IB)	
Fabric Width	Ordered Width Minus 1 3/8”
Bracket to Bracket Width	Ordered Width Minus 1/8”
OUTSIDE MOUNT (OB)	
Fabric Width	Ordered Width Minus 1 3/8”
Bracket to Bracket Width	Ordered Width
MOTORIZED SYSTEMS	
Not applicable for 2 1/2” tube with cassette systems	

Important Technical Notes

Inside Mount Deductions

Nice Sun Shades automatically takes 1/8” deduction for inside mount shades to account for:

- Measurement inaccuracies
- Window inconsistencies
- Installation tolerances
- Proper shade operation clearance

This ensures shades fit properly within window openings without binding or operational issues.

Motorization Requirements

Certain shade sizes require motorization for proper operation:

- Consult motor selection guide for torque requirements
- Consider fabric weight and shade dimensions
- Verify motor specifications match application
- Follow Nice specifications for motor selection

Cassette and Motor Compatibility

Important Consideration: Using quiet motors within metal cassettes or fascias will result in sound resonance. For ultra-quiet operation in luxury applications:

- Consider fabric-wrapped valance options
- Use open bracket systems
- Specify alternative hardware configurations
- Consult with Nice technical support

Height Limitations

Standard Maximum Heights

- Most systems: 180”
- Cordless systems: 120”
- Cassette systems: 120”

Extended Heights: For applications requiring heights greater than 168”, contact customer service for:

- Custom configurations
- Special engineering
- Alternative hardware solutions
- Technical consultation

Fabric Width Considerations

Standard Orientation

- Shade width limited by fabric width
- Consult fabric collection chart for specific fabric widths
- Most fabrics: 98” to 118” wide

Railroaded Orientation

- Available only for designated railroadable fabrics
- Enables wider shade widths
- Maximum height becomes fabric width minus 18”
- Pattern orientation changes from vertical to horizontal

Seamed Shades

- Required when both width and height exceed fabric dimensions
- Seam placement optimized for minimal visibility
- Matching seams available across multiple shades (add 10% cost)

Measurement Accuracy Requirements

Professional Standards

Width Measurements

- Accurate to nearest 1/16”
- Round down for inside mounts
- Round up for outside mounts (if necessary)

Height Measurements

- Accurate to nearest 1/8”
- Multiple measurement points required
- Use shortest measurement for inside mounts

Verification

- Measure each window separately
- Never assume identical dimensions
- Verify diagonal measurements for square
- Document all measurements carefully

Accurate measurement and proper installation are the foundation of client satisfaction. Invest time in careful measurement and systematic documentation to ensure every Nice Sun Shades installation meets the exacting standards that luxury clients expect.

Measuring & Installation

PRECISION MEASUREMENT FOR LUXURY INSTALLATIONS

Accurate measurement is the foundation of every successful Nice Sun Shades installation. Our comprehensive measuring guidelines ensure proper fit, optimal operation, and the flawless aesthetic that luxury installations demand.

Measuring Guidelines

Critical Importance

The Foundation of Success

Accurate measurements are absolutely essential for Nice Sun Shades installations. The measurements you provide determine both pricing and fabrication specifications. Dimensions supplied on the order form must be correct for shades to properly fit window openings.

Professional Responsibility

- Dealers are responsible for accurate measurement and ordering
- Manufacturer cannot be held accountable for incorrect measurements
- Investment in proper measurement ensures client satisfaction
- Professional reputation depends on measurement accuracy

Basic Measurement Guidelines

Tools Required

Essential Equipment

- Steel tape measure (preferably 3/4” to 1” wide for rigidity)
- Measurements accurate to 1/16”
- Level for verification
- Notepad for documentation

Best Practices

- Always use steel tape measure (cloth tapes stretch)
- Extend tape measure fully for large measurements
- Ensure tape measure is straight and level
- Have assistant hold tape for large windows
- Double-check all measurements

Measuring Process

Systematic Approach

1. Survey the Installation Area

- Examine window opening carefully
- Note any irregularities or obstructions
- Identify mounting surface conditions
- Verify adequate depth for hardware

2. Measure Width First, Then Height

- Consistent order prevents confusion
- Width measurement most critical
- Height adjustments more forgiving

3. Measure Each Window Separately

- Never assume identical dimensions
- Even manufactured windows vary
- Construction settling affects dimensions
- Individual measurement ensures proper fit

4. Take Multiple Measurements

- Measure at multiple points
- Verify consistency
- Use shortest measurement for inside mounts
- Document all measurements

5. Record Measurements Carefully

- Use measurement worksheet
- Include room identification
- Note mount type (IB or OB)
- Document special requirements

Inside Mount Measuring

For Inside Mount (IB) Applications

Inside mount shades install within the window opening for a clean, integrated appearance.

Width Measurement

1. Measure at Top of Window

- Measure exact width at top of opening
- Measure to nearest 1/16”
- This is the most critical measurement

2. Verify Width Consistency

- Measure width at center of window
- Measure width at bottom of window
- If width narrows by more than 1” from top to bottom:
  - Consider outside mount instead
  - Inside mount may cause light leakage
  - Privacy may be compromised

3. Round Down

- Always round down to nearest 1/16” for inside mounts
- Rounding up could result in shade too wide to fit
- Nice Sun Shades takes additional 1/8” deduction automatically

4. Do Not Make Deductions

- Order exact rounded measurement
- Nice Sun Shades makes all necessary deductions
- Deductions built into manufacturing process

Height Measurement

1. Measure at Three Locations

- Left side of window opening
- Center of window opening
- Right side of window opening

2. Order Shortest Measurement

- Ensures shade fits throughout height
- Prevents binding or operational issues
- Accounts for uneven openings

3. Measure to Nearest 1/8”

- Height measurements to 1/8” accuracy
- More forgiving than width measurements

4. Do Not Make Deductions

- Order exact shortest measurement
- All necessary deductions made automatically

Mounting Depth Verification

1. Measure Window Depth

- Ensure adequate depth for hardware
- Minimum depths vary by hardware type
- Account for window cranks or handles

2. Check for Obstructions

- Window locks or hardware
- Cranks or handles
- Trim or molding that extends into opening

3. Verify Square

- Measure window on diagonal
- Measure opposite diagonal
- If measurements don’t match:
  - Window opening is not square
  - Consider outside mount for better results
  - Inside mount may have operational issues

Outside Mount Measuring

For Outside Mount (OB) and Ceiling Mount Applications

Outside mount shades install on wall or ceiling surface around window opening for maximum light control and privacy.

Width Measurement

1. Determine Desired Coverage

- Measure window opening width
- Add overlap on each side for light control
- **Recommended:** Minimum 1 1/2” overlap each side
- Additional overlap improves light seal and privacy

2. Measure Mounting Surface Width

- Measure at desired roller position
- Verify adequate flat surface for brackets
- Account for trim or molding

3. Calculate Order Width

- Window opening width + (overlap × 2)
- Example: 36” opening + 3” overlap (1 1/2” each side) = 39” order width

4. Consider Fabric Width

- Actual fabric will be approximately:
  - 1 1/8” narrower up to 72” width
  - 1 1/4” narrower beyond 72” width
- End plugs extend beyond fabric approximately 2 1/2” total
- Plan accordingly for adequate coverage

5. Verify Mounting Surface

- Flat surface 1/2” wide by 1 1/2” high required for brackets
- Check for adequate clearance
- Verify wall structure adequate for mounting

Height Measurement

1. Determine Top Position

- Decide where top of roller will be located
- Common positions:
  - At ceiling for maximum height
  - Above window trim
  - Coordinated with other windows

2. Determine Bottom Position

- Decide where bottom of shade desired
- Common positions:
  - Window sill
  - Below window trim
  - Floor (for patio doors)

3. Calculate Height

- Measure from desired top position to desired bottom position
- This becomes order height
- No deductions necessary

4. Account for Fabric Drop

- Actual fabric extends to ordered height
- Hembar adds additional 1-2” below fabric

Ceiling Mount Considerations

Special Requirements

1. Mounting Surface

- Ensure adequate ceiling structure
- May require blocking or reinforcement
- Verify bracket compatibility

2. Clearance

- Check for adequate clearance from ceiling
- Account for shade mechanism depth
- Verify no interference with ceiling fixtures

3. Return to Wall

- Measure distance from ceiling to wall
- Account for shade depth
- Ensure adequate clearance for operation

Rounding Measurements

Dimensional Tolerance Guidelines

Order Form Accuracy

- Width: Accurate to within 1/16”
- Height: Accurate to within 1/8”

Rounding Guidelines

Inside Mounts

- **Always round width measurements DOWN** to nearest 1/16”
- Rounding up could result in shade too wide to fit
- Critical for proper operation

Outside Mounts

- Generally round measurements up to nearest 1/16”
- Ensures adequate coverage
- Prevents light gaps

Height Measurements

- Round to nearest 1/8” for both mount types
- Height measurements more forgiving than width

Installation Notes

Skyline Manual System Installation

Installation Advantages

- Spring-loaded pin-end technology is highly forgiving
- Accommodates slight measurement variations
- Greater flexibility during installation
- Universal single and dual brackets
- No-notch fascia design for clean appearance

Installation Tips

- Verify level mounting
- Test operation before final securing
- Adjust tension as needed
- Install child safety devices per instructions

Motorized Shade Installation

Pre-Installation Requirements

- Ensure adequate electrical supply
- Verify voltage compatibility (110V AC or 24V DC)
- Check electrical code compliance
- Test electrical connections before installing shade

Motor Programming

- Program limit switches before final installation
- Set top and bottom positions
- Test operation throughout full travel
- Verify obstacle detection functioning
- Program intermediate positions if desired

Final Installation

- Secure mounting brackets level
- Install shade and verify operation
- Fine-tune limit positions if needed
- Test with all control devices
- Verify quiet operation

Cassette System Installation

Critical Requirements

- Ensure perfectly level mounting
- Cassettes amplify any mounting irregularities
- Verify bracket positioning precise
- Test shade operation before completing installation

Fabric Insert or Wrap

- Ensure fabric insert properly seated
- Verify fabric wrap secure
- Check for gaps or irregularities
- Ensure professional appearance

Child Safety Installation

Mandatory Safety Requirements

1. Install Tension Device (for clutch-operated shades)

- Follow manufacturer instructions precisely
- Tension device prevents operation unless properly installed
- Prevents children from pulling cords around necks

2. Use Cord Cleats (for manual shades with cords)

- Install cord cleats per instructions
- Keep cords out of reach of children
- Secure excess cord properly
- Follow WCMA/ANSI Standards
- Comply with all safety standards
- Install breakaway cord stops
- Use Cord-Shield cording
- Install all provided safety devices

3. Educate Clients

- Explain safety features and operation
- Demonstrate proper use
- Emphasize importance of cord management

Measuring Worksheet

Professional Documentation

Window Measurement Template

Window #1

Location Information

- Room: _____
- Width Measurement 1 (Top): _____
- Width Measurement 2 (Center): _____
- Width Measurement 3 (Bottom): _____
- **Order Width:** _____
- Height Measurement 1 (Left): _____
- Height Measurement 2 (Center): _____
- Height Measurement 3 (Right): _____
- **Order Height:** _____
- Mount Type: ☐ IB ☐ OB
- Mounting Depth: _____
- Diagonal 1: _____
- Diagonal 2: _____

Project Details

Customer Name: _____ Order Date: _____

Project Address: _____ Purchase Order #: _____

City, State, ZIP: _____ Salesperson: _____

Installation Date: _____ Installer: _____

Shade Specifications

- Fabric: _____
- Pattern: _____
- Color: _____
- SKU: _____
- Hardware: _____
- Hardware Color: _____
- Control Type: _____
- Motor (if applicable): _____
- Roll Direction: ☐ Standard ☐ Reverse

Special Requirements

- Railroading: ☐ Yes ☐ No
- Seams Required: ☐ Yes ☐ No
- Custom Color: ☐ Yes ☐ No
- Custom Pattern: ☐ Yes ☐ No
- Other: _____

_____
_____
_____
_____

Notes

_____
_____
_____
_____
_____
_____
_____
_____
_____
_____
_____
_____
_____
_____
_____
_____
_____
_____
_____
_____
_____

Proper care and maintenance preserve the luxury appearance and optimal performance of Nice Sun Shades. Our comprehensive warranty coverage provides confidence and peace of mind, backed by industry-leading motor warranty terms that reflect our commitment to manufacturing excellence.

Warranty & Care

COMPREHENSIVE WARRANTY PROTECTION

While Nice Sun Shades is renowned for proprietary motor technology, our manual control Nice Sun Shades stands behind our products with comprehensive warranty coverage that reflects our confidence in manufacturing quality and engineering excellence. Our warranties provide peace of mind for both custom installation professionals and luxury homeowners.Each manual system delivers smooth, reliable performance with sophisticated design details.

Limited Lifetime Warranty

Safety Meets Sophistication

Shade Components Coverage

Nice Sun Shades warrants that roller shades will be free from defects in materials and workmanship for as long as the original retail purchaser owns the product, provided that:

Coverage Requirements

- Products properly installed in residential dwellings
- Products made or assembled exclusively from Nice Sun Shades materials and components
- Normal residential use and maintenance

Warranty Obligation

- Repair or replace shadings or components found to be defective
- Repairs made with like or similar parts
- Manufacturer's option to repair or replace

Warranty Exclusions

- Shipping charges
- Labor costs for measuring, fabricating, and installation
- Service call charges

What's Not Covered

Exclusions from Warranty

Environmental and Use-Related

- Accidents or alterations
- Exposure to elements causing fading of shade colors
- Misuse or abuse
- Failure to follow measurement, installation, cleaning, or maintenance instructions

Chemical and Substance Damage

- Damage to shade fabrics from window cleaners or similar substances
- Discoloration from chemicals
- Damage from unauthorized cleaning methods

Reinstallation

- Damage from removal and reinstallation
- Shades moved to different windows
- Modifications after original installation

Normal Wear

- Normal wear and tear over time
- Gradual degradation from extended use
- Age-related changes in appearance

Warranty Limitations

Important Legal Notice

This warranty is exclusive and in lieu of all other obligations, liabilities, or warranties. Nice Sun Shades shall not be liable for:

- Incidental or consequential damages
- Direct or indirect damage, loss, cost, expense, or fee
- Special or punitive damages

Some states do not allow exclusion or limitation of incidental or consequential damages, so these limitations may not apply in all jurisdictions.

Nice Motor Warranty

Industry-Leading Motor Coverage

Nice Sun Shades' proprietary Nice Era Inn motor warranty reflects our confidence in manufacturing quality and represents industry-leading coverage:

Wired Motors (AC and DC)

- **7-year warranty** on materials and workmanship
- Coverage period from date stamped or affixed on motor label
- Repair or replacement at Nice's option
- Service provided free of charge through authorized end product suppliers

Battery Powered Motors

- **5-year warranty** on materials and workmanship
- Coverage period from date stamped or affixed on motor label
- Batteries excluded (consumable items)
- Repair or replacement at Nice's option

Motor Warranty Requirements

Coverage Conditions

Proper Installation

- Installed per Nice specifications
- Installed by qualified professional
- Appropriate motor selection for application
- Correct electrical connections

Normal Use

- Operated under normal residential conditions
- Not subjected to abuse or misuse
- Used within rated duty cycle
- Proper maintenance performed

Authorized Components

- Used with Nice-approved components
- No unauthorized modifications
- Electrical accessories previously approved in writing

Motor Warranty Exclusions

Not Covered

Installation Issues

- Improper installation
- Usage not in accordance with Nice instructions
- Installation contrary to specifications

Physical Damage

- Product opened or dismantled
- Evidence of abuse or damage
- Impact or water damage

Misapplication

- Product used for functions other than designed
- Motorizing non-approved window attachments
- Overloading beyond specifications

Unauthorized Accessories

- Electrical accessories not approved in writing by Nice
- Third-party control systems
- Unauthorized modifications

Warranty Service Process

To Obtain Warranty Service

Contact Customer Service

- Provide motor serial number
- Describe issue in detail
- Provide proof of purchase date

Obtain Return Authorization

- Receive RGA (Return Goods Authorization) number
- Follow return instructions
- Ship product freight prepaid to Nice

Inspection and Service

- Nice inspects returned product
- Determines if covered under warranty
- Repairs or replaces covered defective items
- Returns product freight prepaid

Child Safety

Designed with Safety as Priority

Nice Sun Shades designs roller shades with child safety as a fundamental priority, incorporating features to comply with current ANSI cord safety standards and exceed industry requirements.

Safety Features Included

For Manual Cord-Operated Shades

- Breakaway cord stops
- Cord-Shield cording system
- Tension devices
- Cord cleats for securing cords out of reach

For Clutch-Operated Shades

- Tension device designed to prevent operation unless properly installed
- Cannot be operated until tension device installed per instructions
- Prevents children from pulling cords

For Cordless Shades

- Complete elimination of cord hazards
- Safest manual operation available
- Complies with highest safety standards

For Motorized Shades

- No accessible cords
- Eliminates strangulation hazards
- Safest operation available

Essential Safety Guidelines

Critical Safety Requirements

Keep Cords Out of Reach

- All cords must be kept out of reach of children
- Use provided cord cleats to secure cords
- Cord cleats included with all cord-operated shades

Proper Tension Device Installation

- Tension device must be installed per instructions
- Device prevents shade operation until properly installed
- Critical for clutch-operated shades

Educate Household Members

- All adults should understand safety features
- Explain operation to household members
- Never allow children to play with cords

Consider Cordless or Motorized

- Safest options for homes with young children
- Eliminate cord-related hazards
- Provide peace of mind

Care & Cleaning

Maintaining Luxury Appearance

Nice Sun Shades fabrics are specially treated to repel dust and dirt, making maintenance simple while preserving luxury appearance.

Regular Maintenance

Dusting

- Dust regularly with soft cloth or duster
- Maintains like-new appearance
- Prevents buildup
- Quick and easy maintenance

Vacuuming

- For deeper cleaning, use vacuum with furniture brush attachment
- Vacuum gently to avoid damage
- Use low suction setting
- Clean both sides if accessible

Spot Cleaning

When Necessary

Use Gentle Methods

- Spot-clean with soft cloth or sponge
- Moisten with lukewarm water only
- Blot gently, do not rub
- Work from outside of spot toward center

Drying

- Dry shade in fully lowered position
- Allow complete drying before raising
- Air dry only, no heat

Avoid Harsh Chemicals

- Do not use window cleaners
- Do not use harsh chemicals
- Do not use abrasive materials
- Do not use bleach or solvents

What Not to Do

Important Warnings

- **Never machine wash** - Will damage fabric and mechanisms
- **Never dry clean** - Chemicals damage treatments and materials
- **Never use window cleaner**s - Can cause discoloration (not covered by warranty)
- **Never apply direct water spra**y - Can cause water spots or damage
- **Never iron or apply heat** - Damages fabric and treatments

Motorized Shade Maintenance

Motor Care

- No maintenance required for motors
- Keep motor area clean and dry
- Do not spray cleaning products near motors
- Professional service only for motor issues

Electrical Components

- Keep dry
- Do not expose to moisture
- Protect during cleaning activities
- No user-serviceable parts

Fabric Care By Type

Solar Screen Fabrics

Special Considerations

- May require more frequent cleaning in dusty environments
- UV-resistant treatments maintain performance
- Open weave design facilitates cleaning
- Gentle vacuuming most effective

Blackout Fabrics

Special Considerations

- Backing materials may require extra care
- Avoid moisture on backing
- Dust regularly to maintain appearance
- Professional cleaning if heavily soiled

Light-Filtering and Sheer Fabrics

Special Considerations

- Show dust more readily
- Regular dusting essential
- Gentle cleaning methods critical
- Avoid harsh treatment

Professional Cleaning

When to Consult Professionals

- Heavily soiled shades
- Stubborn stains
- Complete refurbishment needed
- Commercial installations

Contact Nice Sun Shades customer service for

- Recommended professional cleaning services
- Specific fabric care questions
- Stain removal guidance
- Restoration options

Ordering Information

PROFESSIONAL ORDERING GUIDELINES

Accurate, complete ordering information ensures proper fabrication and timely delivery of Nice Sun Shades. This section provides comprehensive guidance for professional ordering.

Order Requirements

Essential Information for Each Shade

Every order must include complete specifications

1. Shade Dimensions

Width Measurement

- Measured to nearest 1/16”
- Specify exactly as measured (after proper rounding)
- No deductions (Nice Sun Shades makes all necessary deductions)

Height Measurement

- Measured to nearest 1/8”
- Shortest measurement for inside mounts
- Exact desired drop for outside mounts

Mount Type

- Inside Mount (IB)
- Outside Mount (OB)
- Ceiling Mount (specify if different from OB)

2. Fabric Selection

Complete Fabric Information

- Fabric Name:
- Select from Material Collection Chart
- Use exact fabric name (e.g., “Esther Blackout”)

Pattern (if applicable)

- Specify pattern name if using COLOR printed fabric
- Reference sample book or QR code
- Provide pattern number if available

Color

- Specify color name from collection
- For COLOR Plus: Provide Sherwin Williams color number
- For COLOR Custom: Reference approved custom pattern

SKU Number

- Complete SKU from sample book
- Ensures accurate fabric selection
- Prevents ordering errors

3. Hardware Configuration

Hardware Selection

Hardware Type

- Cassette (specify: Medium 100, Large 120, Squared, True-Squared)
- Fascia (specify: 4” or 5”)
- Classic Valance (specify header depth: 1.5”, 2.5”, or 3.5”)
- Standard brackets (for manual clutch systems)

Hardware Color

- White
- Vanilla
- Black
- Bronze
- Clear Anodized

Hardware Options

- Fabric insert (for cassettes)
- Fabric wrap (for cassettes and valance)
- Clutch covers (specify color)

4. Control Type

Operating System

Manual Options

- Skyline clutch with continuous chain
- Cordless
- Cordless-Plus

Chain Type (if manual clutch)

- Stainless Steel (standard)
- Medieval Brass
- Antique Brown on Brass
- Dungeon Gray

Motorized

- Specify motor series and specifications

5. Motor Specifications
(if motorized)

Complete Motor Information

Motor Series

- ERA INN EDGE
- ERA INN EDGE S Li-ion
- ERA INN SMART

Tube Size

- S (35mm) for standard applications
- M (45mm) for larger shades

Power Type AC (100-240V)

- DC (24V)

Torque

- 3 Nm for smaller shades
- 6 Nm for medium/standard applications
- 10 Nm for large shades (SMART only)

Control Type

- Radio transmitter (specify model)
- Wall switch (specify model)
- MyNice World app integration
- Advanced control system (specify)

6. Roll Direction

Fabric Roll Configuration

Standard Roll

- Fabric rolls off back of tube
- Most common configuration
- Default if not specified

Reverse Roll

- Fabric rolls off front of tube
- Used for specific applications
- Must be specified

7. Special Requirements

Additional Specifications

Railroading

- Required for shades wider than fabric width
- Only available for designated railroadable fabrics
- Specify “Railroaded” on order

Seams

- Required for shades exceeding fabric dimensions both ways
- Specify if seams required on smaller shades to match larger shades (add 10% to price)

Custom Colors (COLOR Plus)

- Requires written approval before order submission
- Provide Sherwin Williams color number
- Reference approved sample

Custom Patterns (COLOR Custom)

- Requires written approval and quoted pricing
- Reference approved pattern design
- Specify custom pattern name or reference number

Side Channels

- Specify if required
- Provide installation details
- Contact customer service for pricing

Bottom Channels

- Specify if required
- Provide installation details
- Contact customer service for pricing

Custom Color & Pattern Orders

COLOR Plus

Custom Color Process

Step-by-Step Process

1. Select Base Fabric
- Choose from 18 premium fabric options
- Consider opacity level and application
- Verify fabric is printable if required

2. Select Pattern
- Choose pattern from collection
- Or select pattern from different fabric to apply to chosen fabric

3. Select Color
- Choose from 1,500+ Sherwin Williams colors
- Provide exact color name and number
- Or request custom color match

4. Order Memo Sample
- Required before full shade order
- Verify color accuracy and pattern clarity
- Client approval recommended

5. Obtain Written Approval
- Submit request with complete specifications
- Receive written approval from Nice Sun Shades
- Approval required before order submission

6. Place Order
- Reference approved COLOR Plus request
- Provide all standard order information
- Allow appropriate lead time

Custom Pattern Process

Step-by-Step Process

1. Pattern Design
- Create or provide pattern artwork
- Or describe desired pattern for Nice design team
- Ensure appropriate resolution and format

2. Technical Review
- Nice reviews pattern for feasibility
- Provides technical guidance
- Estimates setup costs

3. Quote and Approval
- Receive quote for setup fees and labor charges
- Review and approve costs
- Approve pattern design

4. Sample Production
- Order memo sample of custom pattern
- Review for accuracy and quality
- Obtain client approval

5. Written Approval
- Receive written approval from Nice Sun Shades
- Confirm all specifications
- Approve for production

6. Place Order
- Reference approved COLOR Custom request
- Provide all standard order information
- Allow extended lead time for custom production

Memo Sample Pricing

Investment in Confidence

Order samples before committing to full shades ensures client satisfaction:

Sample Sizes and Pricing

- **6” x 12”:** $12.00 - Quick reference size
- **12” x 12”:** $18.00 - Standard sample size
- **24” x 24”**: $25.00 - Enhanced visibility of pattern
- **48” x 48”:** $66.00 - Large sample for major installations

Sample Benefits

- Accurate representation of fabric texture
- True color accuracy
- Pattern clarity verification
- Client approval before investment
- Prevents costly errors

Measuring Worksheet

Professional Order Documentation

Window/Shade Specification Template

Project Details

Customer Name: _____ Order Date: _____

Project Address: _____ Purchase Order #: _____

City, State, ZIP: _____ Salesperson: _____

Installation Date: _____ Installer: _____

Shade #1

Location Information

- Room: _____
- Window Location: _____
- Quantity: _____

Measurements

- Width: _____ (to nearest 1/16")
- Height: _____ (to nearest 1/8")
- Mount Type: ☐ Inside (IB) ☐ Outside (OB)

Fabric Specifications

- Fabric Name: _____
- Pattern: _____
- Color: _____
- SKU Number: _____

Hardware Configuration

- Hardware Type: _____
- Hardware Size: _____
- Hardware Color: _____
- Fabric Insert/Wrap: ☐ Yes ☐ No

Control System

- Control Type: _____
- Chain Type (if applicable): _____
- Motor Series (if motorized): _____
- Motor Tube Size: ☐ S (35mm) ☐ M (45mm)
- Motor Power: ☐ AC ☐ DC
- Motor Torque: ☐ 3Nm ☐ 6Nm ☐ 10Nm
- Transmitter/Control: _____

Configuration

- Roll Direction: ☐ Standard ☐ Reverse
- Railroading: ☐ Yes ☐ No
- Seams: ☐ Yes ☐ No

Special Requirements

- COLOR Plus: ☐ Yes ☐ No (if yes, attach approval)
- COLOR Custom: ☐ Yes ☐ No (if yes, attach approval)
- Side Channels: ☐ Yes ☐ No
- Bottom Channels: ☐ Yes ☐ No
- Other: _____

Notes

_____

Repeat template for each shade/window

Quality Control Checklist

Pre-Submission Verification

Before Submitting Order, Verify

Measurements

- ☐ All measurements accurate to 1/16” (width) and 1/8” (height)
- ☐ Mount type specified for each shade
- ☐ Measurements verified against worksheet
- ☐ Multiple measurement points checked
- ☐ Diagonal measurements confirm square (for IB)

Fabric Specifications

- ☐ Fabric SKU verified from sample book
- ☐ Pattern and color specified correctly
- ☐ Opacity level appropriate for application
- ☐ Fabric width adequate for shade width
- ☐ Railroading specified if required

Hardware Selection

- ☐ Hardware type specified
- ☐ Hardware size/style specified
- ☐ Hardware color specified
- ☐ Fabric insert/wrap specified if desired
- ☐ Hardware compatible with control type

Control System

- ☐ Control type specified
- ☐ Chain type specified (if manual)
- ☐ Motor specifications complete (if motorized)
- ☐ Transmitter/control specified (if motorized)
- ☐ Power type confirmed (AC or DC)

Configuration

- ☐ Roll direction specified
- ☐ Railroading requirements noted
- ☐ Seam requirements specified
- ☐ Special requirements documented

Custom Orders

- ☐ COLOR Plus approval obtained (if applicable)
- ☐ COLOR Custom approval obtained (if applicable)
- ☐ Memo samples ordered and approved (if applicable)
- ☐ Written approvals attached to order
- ☐ Setup fees approved (if applicable)

Project Information

- ☐ Customer contact information complete
- ☐ Project address accurate
- ☐ Installation date confirmed
- ☐ Purchase order number provided
- ☐ Special delivery instructions noted

Contact Information

Customer Service

For Questions and Support

- Custom configurations and special requirements
- Technical support and product selection
- Custom color and pattern approvals
- Pricing and lead time information
- Order status and tracking

Technical Support

For Installation and Programming Assistance

- Installation guidance and support
- Motor programming instructions
- Troubleshooting assistance
- Warranty service requests

Order Processing

Lead Times

- Standard production lead times apply
- Expedited production available for additional fee
- Custom colors and patterns require extended lead time
- Contact customer service for current lead times

Expedite Options

- Rush production available
- Additional fees apply
- Contact customer service for expedite availability
- Confirm expedite delivery date before ordering

Professional Ordering Tips

Best Practices

Use Measurement Worksheet

- Document all measurements systematically
- Keep permanent records
- Include room identification
- Note special requirements

Verify Before Submitting

- Double-check all measurements
- Confirm fabric specifications
- Review hardware selections
- Verify motor specifications

Client Approval

- Review complete specifications with client
- Confirm color and pattern selections with samples
- Obtain signed approval for custom orders
- Document all special requests

Maintain Records

- Keep copy of all orders
- File measurement worksheets
- Retain fabric samples
- Document custom approvals

Communication

- Provide client with order confirmation
- Communicate lead times clearly
- Update client on order status
- Confirm installation scheduling

Nice North America LLC
5919 Sea Otter Place, Suite 100
Carlsbad, CA 92010

www.niceforyou.com/na/solutions/sun-shading

Nice

©2026 Nice North America LLC. All rights reserved. All other brand names are the property of their respective owners.